acus
sound engineering

Stageremote

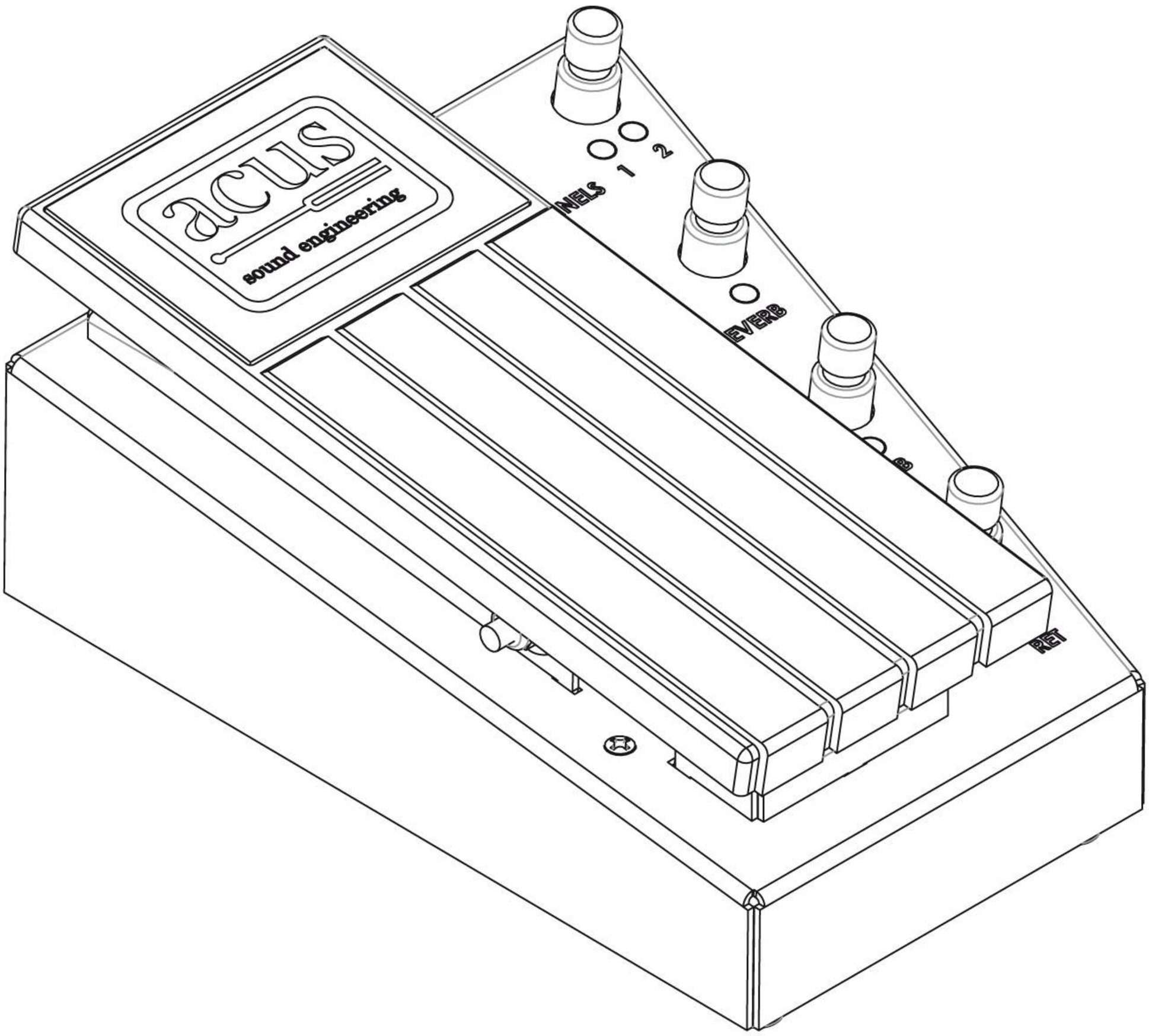

MANUALE DI ISTRUZIONE
USER MANUAL
MANUEL D'ISTRUCTION

THE LIGHTNING FLASH WITH THE ARROWED SYMBOL, WITHIN AN EQUILATERAL TRIANGLE, IS INTENDED TO ALERT THE USER TO THE PRESENT OF UNINSULATED "DANGEROUS VOLTAGE" WITHIN THE PRODUCT'S ENCLOSURE THAT MAY BE OF A SUFFICIENT MAGNITUDE TO CONSTITUTE A RISK OF ELECTRIC SHOCK TO PERSONS.

THE EXCLAMATION MARK WITHIN AN EQUILATERAL TRIANGLE, IS INTENDED TO ALERT THE USERS TO THE PRESENCE OF IMPORTANT OPERATING AND MAINTENANCE INSTRUCTIONS IN THE LITERATURE ACCOMPANYING THE APPLIANCE.

WARNING: TO REDUCE THE RISK OF FIRE OR ELECTRIC SHOCK DO NOT EXPOSE THIS APPARATUS RAIN OR MOISTURE.

1) Read these instructions.

2) Keep these instructions.

3) Heed all warnings.

4) Follow all instructions.

5) Do not use this apparatus near water.

6) Clean only with dry cloth.

7) Do not block any ventilation openings.

8) Do not install near any heat sources as radiator, heat registers, stoves or other apparatus (including amplifiers)) that produce heat.

9) Do not defeat the safety purpose of the polarized or grounding-type plug. A polarized plug has two blades with one wider than the other. A grounding type plug has two blades and a third grounding prong. The wide blade or the third prong are provided for your safety. If the provided plug does not fit into your outlet, consult an electrician for replacement of the obsolete outlet.

10) Protect the power cord from being walked or on pinched particularly at plugs, convenience receptacles, and the point where they exit from the apparatus.

11) Only use attachments/accessories specified by the manufacturer.

12) Use only with the cart, stand, tripod, braket or table specified by the manufacturer, or sold with the apparatus. When a cart is used, use caution when moving the cart/apparatus combination to avoid injury from tip-over.

13) Unplug this apparatus during lightning storms or when used for long periods of time.

14) Refer all servicing to qualified personnel. Servicing is required when the apparatus has been damaged in any way, such as power-supply cordor plug is damaged, liquid has been spilled or objects have fallen into the apparatus, the apparatus has been exposed to rain or moisture, does not operate normally, or has been dropped.

Do not cover the dissipation heat sink.
Leave space around the amplifier to ensure a good ventilation.

The apparatus shall not be exposed to dripping or spashing and no objects filled with liquids, such as vases, shall be placed on the apparatus.

The apparatus shall be connected to an outlet with a protective earthing connection.

Install the apparatus so that the mains plug and the appliance coupler remain readly operable.

No naked flame sources, such as lighted candles,should be placed on the apparatus.

The Stage Remote Control is a controller for Acus Sound Engineering products featuring the dedicated output jack.

NOTE: THE DEVICE CONTROLLED BY STAGE REMOTE CONTROL SHALL HEREINAFTER BE REFERRED TO AS THE MASTER DEVICE.

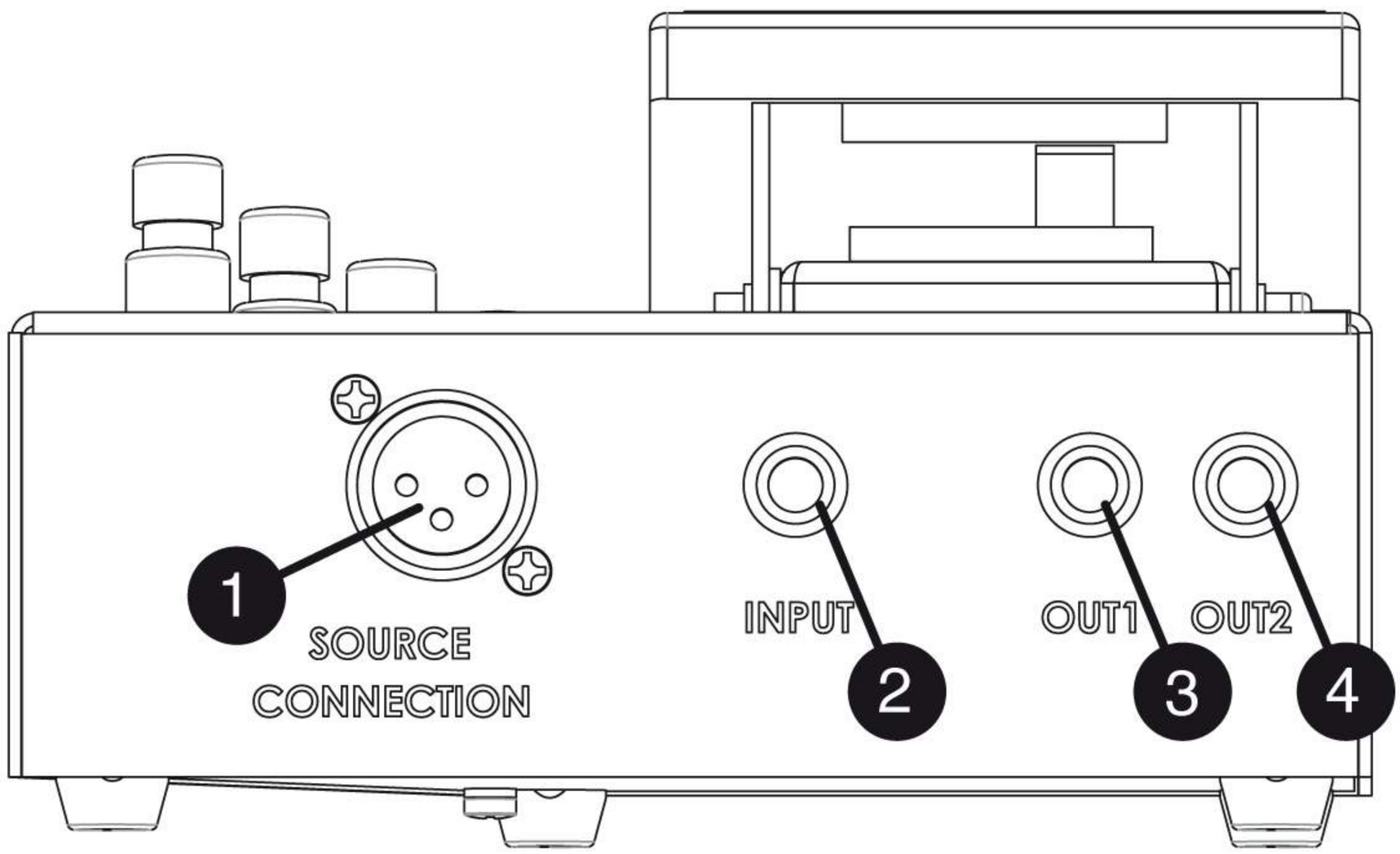

IMPORTANT: TO ENSURE CORRECT FUNCTIONING, THE CONTROLLING **XLR CABLE** OF THE STAGE REMOTE CONTROL **MUST BE CONNECTED TO THE MASTER DEVICE BEFORE IT IS SWITCHED ON.**

1 SOURCE CONNECTION:
control input of the device.
To be connected to the Footswitch output of the master device by a normal XLR cable. It is advisable to use a cable no more than 2 meters in length.

2 INPUT:
Stereo input from the guitar.

3 4 OUT 1 ed OUT 2:
mono outputs to be connected to 2 instrument imputs of the master device.

CONTROLS

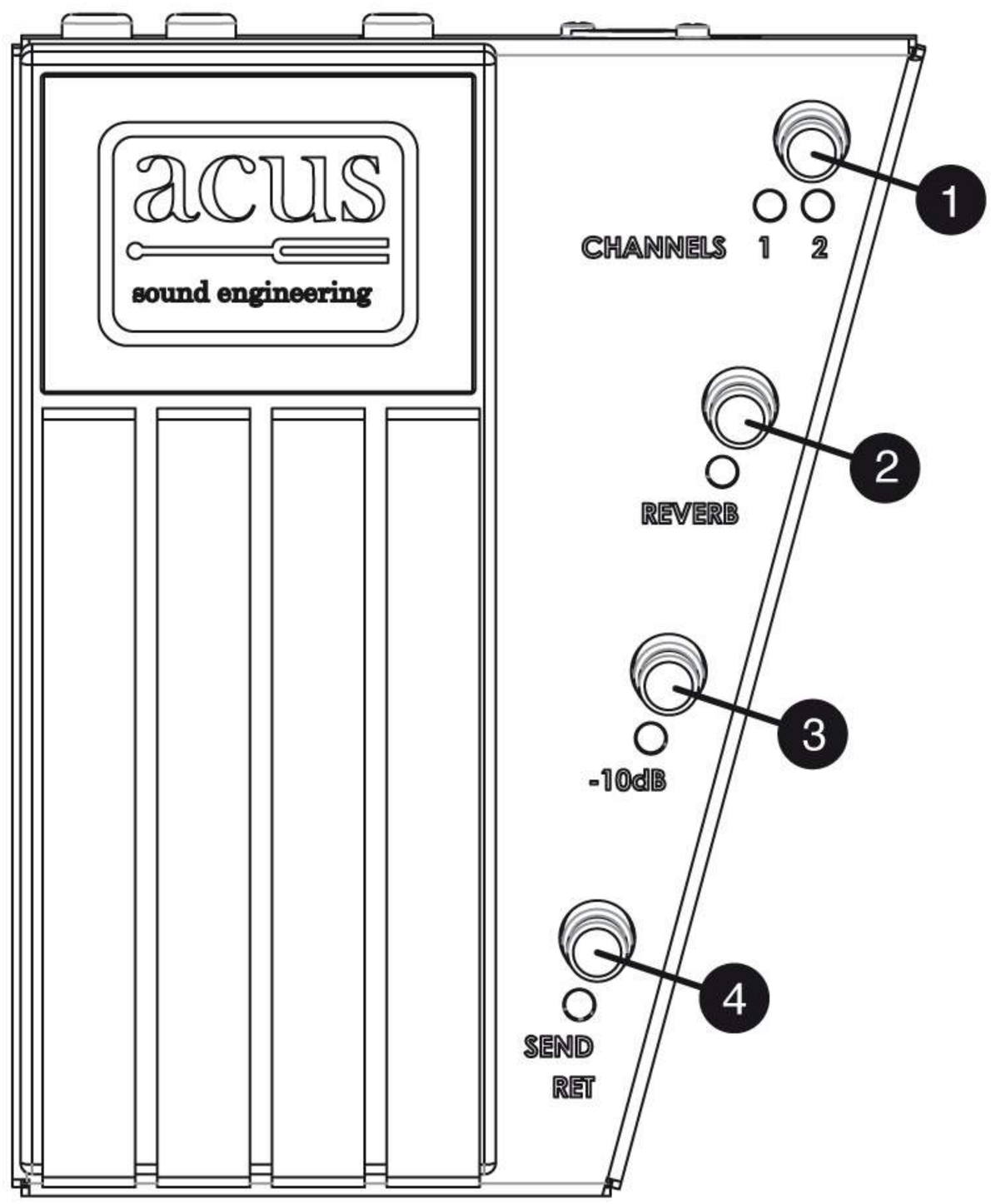

1 CHANNELS 1and2: allow handling of the input signal: by use of the footswitch, LEDs will turn on or off indicating the channels selected. For more detail on the use of the channel controls, refer to the 'Channel Switching' section of this manual.

2 REVERB: through the footswitch it is possible to activate or deactivate the reverb of the master device. If the Reverb LED is on (default setting), the reverb of the master device is active. If the Reverb LED is off, the reverb of the master device is deactivated (and all of its LEDs will be off).

3 -10dB: use of the footswitch will activate or deactivate a 10dB attenuation of the signals indicated by the CHANNELS 1and 2 LEDs. For more detail on the use of the attenuation controls, refer to the 'Signal Attenuation' section of this manual.

4 SEND RET: use of the footswitch will activate or bypass the SEND/RETURN section of the master device. For more detail on the use of the SEND RET controls, refer to the 'Handling External Effects' section of this manual.

CHANNEL SWITCHING

The CHANNELS 1and2 footswitch is for channel switching the input signal to one or more outputs. The inactive channel is shunted to MUTE mode in order to avoid any spurious signals reaching the master device. The details of the CHANNELS section are illustrated below:

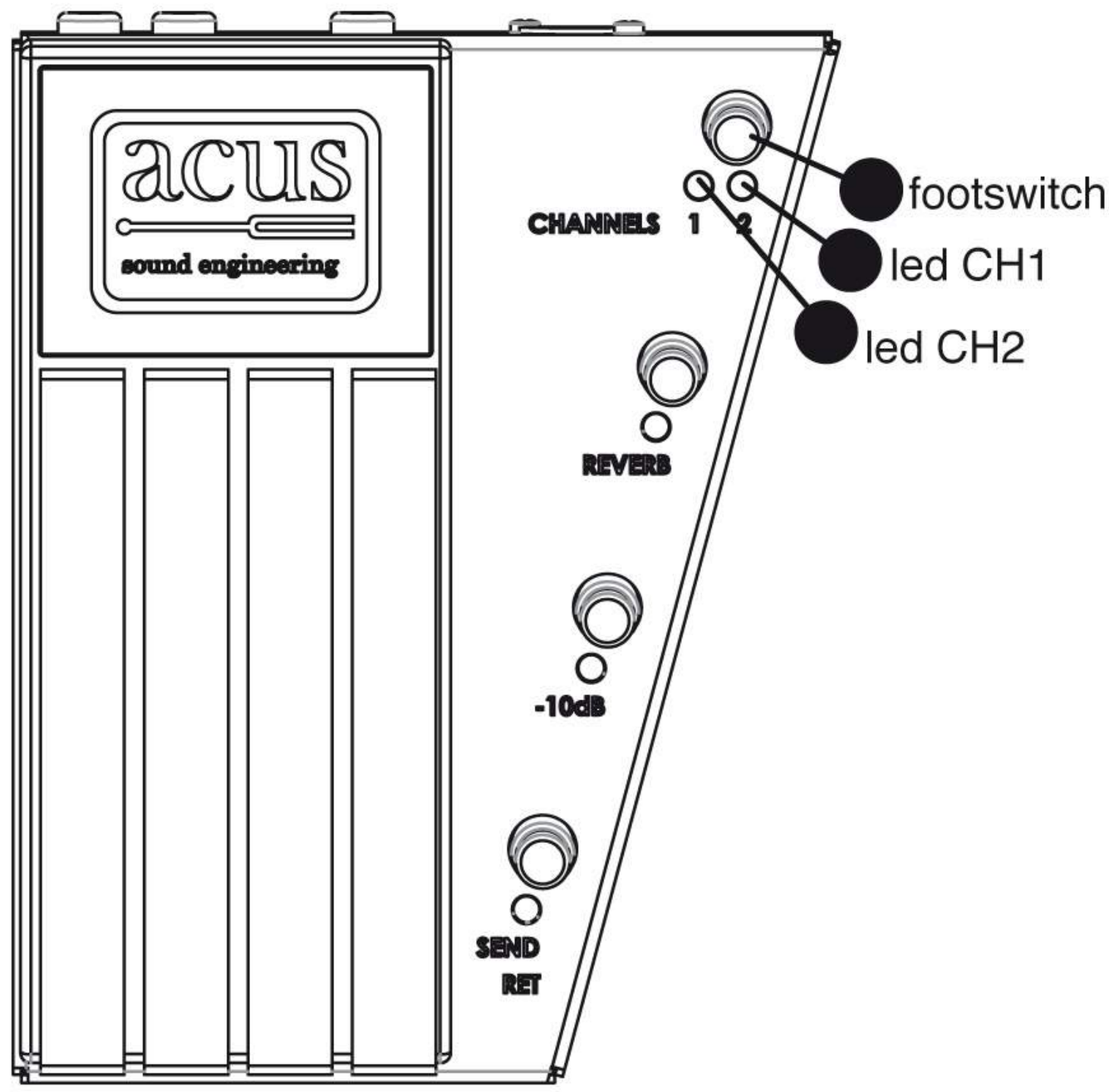

The system can operate in 3 different combinations(Ch1, Ch2, Ch1-2) selectable by the footswitch. Ch1 is default and tapping the footswitch once selects Ch2. From Ch2, tapping the footswitch once more selects Ch12. From Ch1-2, pressing the footswitch again selects Ch1

Ch1

In this mode (with the Ch1 LED on and the Ch2 LED off), the input signal must be mono and will be channeled to the OUT 1 output, while the OUT 2 output will be muted.

Ch2

In this mode (with the Ch2 LED on and the Ch1 LED off), the input signal must be mono and will be channeled to the OUT 2 output, while the OUT 1 output will be muted.

Ch1-2
This mode (with the LED channel indicators on), is for handling a stereo input signal. The stereo signal will be split into 2 mono signals and channeled to the 2 outputs, as illustrated below:

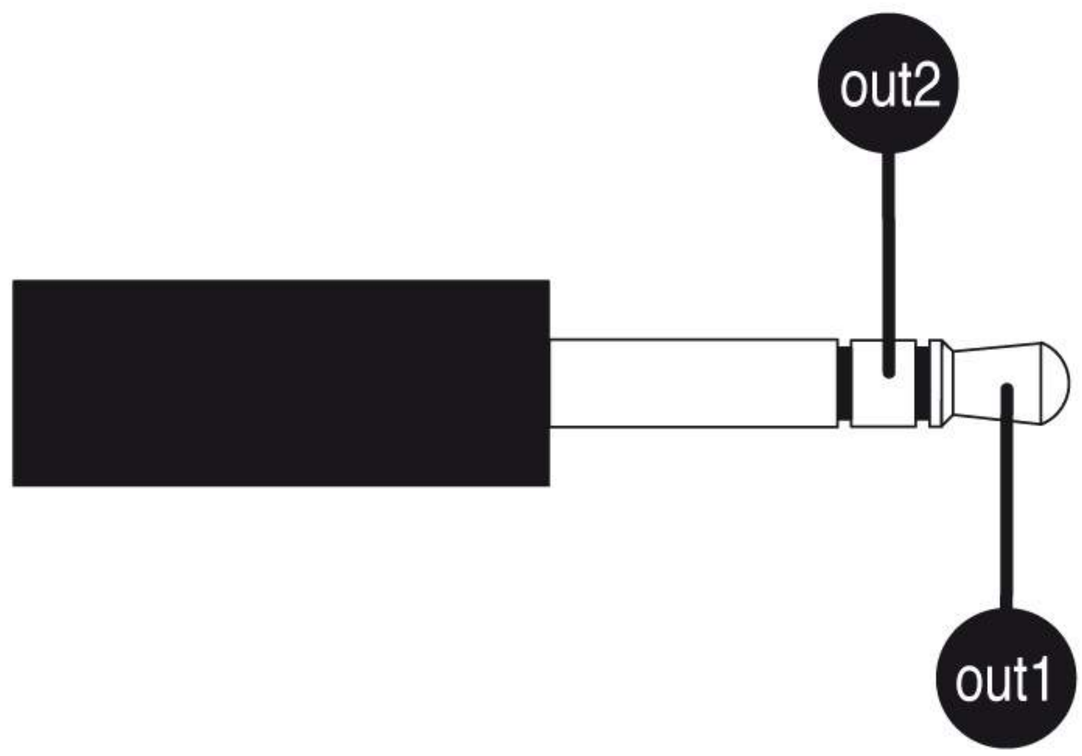

Use of the various channel switching combinations

If the user has a single mono output guitar (as illustrated in the Connections diagram above), the user will always be in Ch1 (or default) mode.

If the user has 2 mono guitars (as illustrated in the Connections diagram above) each of which having different equalization settings (e.g. an acoustic guitar and an electric guitar), the user will switch between Ch1 and Ch2. Using 2 coupled channels of the master device (see "Coupled Channels" section below) with the OUT 1 and OUT 2 ouputs of the Remote Control, the user can set separate equalizations for each of the 2 guitars during soundcheck. When changing guitar, the user needs only to press the MUTE button on the master device (or roll off the volume with the Remote Control volume pedal), switch guitar, and press MUTE again (or use the volume pedal on the Remote Control). No wasting time re-setting the EQ.

If the user has a stereo guitar (as illustrated above in the "Examples of Connections - Stereo Guitar with 2 mono outputs and Stereo guitar with a single Stereo Output"), the signals from the guitar will need 2 different equalizations, which can be achieved by operating in the Ch1-2 mode and equalizing each signal separately.

The -10dB footswitch attenuates the active signal (Ch1, Ch2 or Ch 1-2).
The features of this section of the Remote Control are illustrated below:

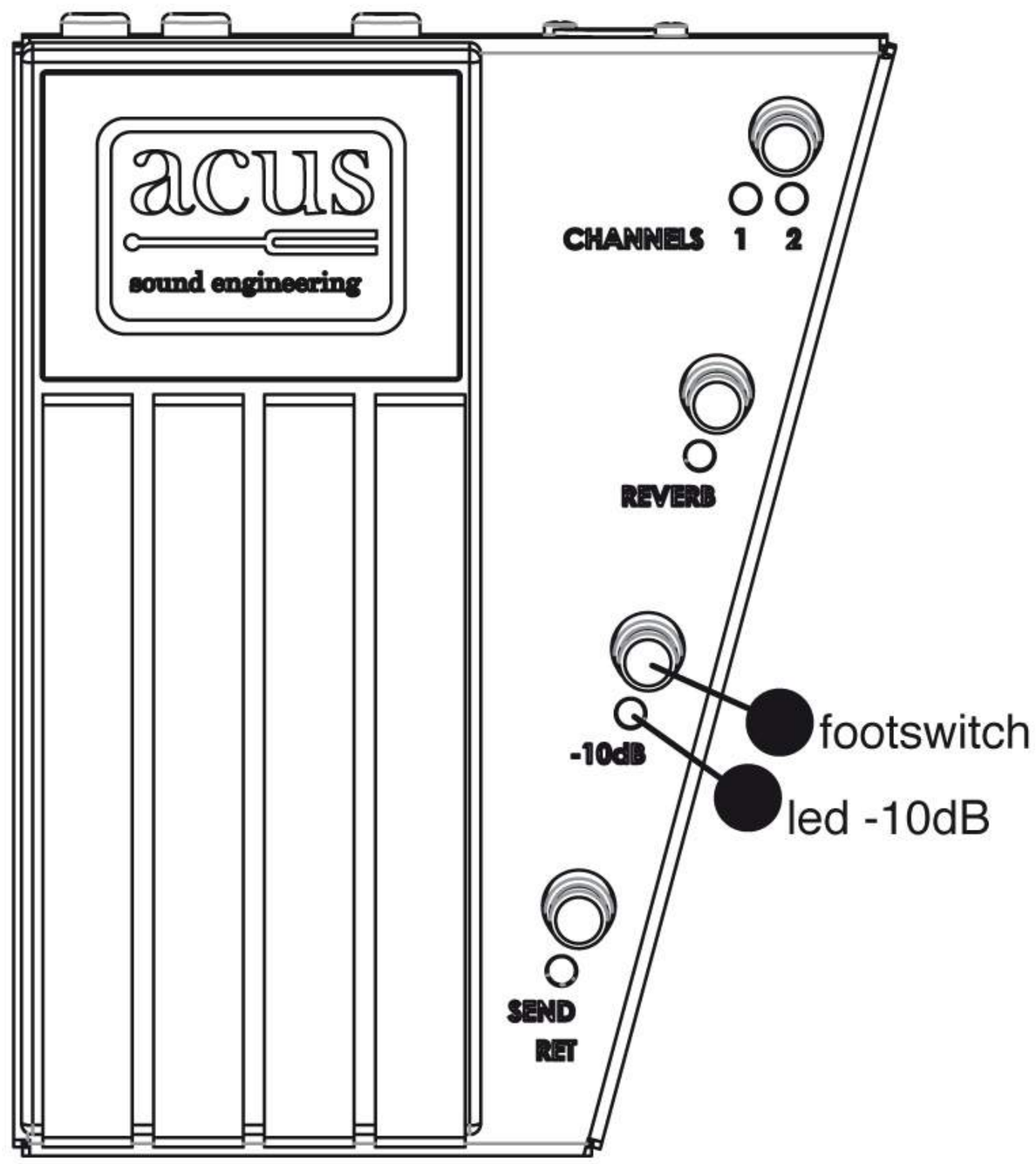

The -10dB section attenuates the signal directly in the Coupled Channels of the master device itself, not in the Remote Control.

Ch1
In this state the -10dB attenuation will be applied to the odd-numbered Coupled Channel of the master device.

Ch2
In this state the -10dB attenuation will be applied to the even-numbered Coupled Channel of the master device.

Ch1-2
In this state the -10dB attenuation will be applied to both Coupled Channels of the master device.

HANDLING EXTERNAL EFFECTS

External effects connected to the SEND/RETURN section in operational state (Ch1, Ch2, or Ch1-2) of the master device can be activated or bypassed through the SEND RET footswitch of the Remote Control. The features of this section are illustrated below:

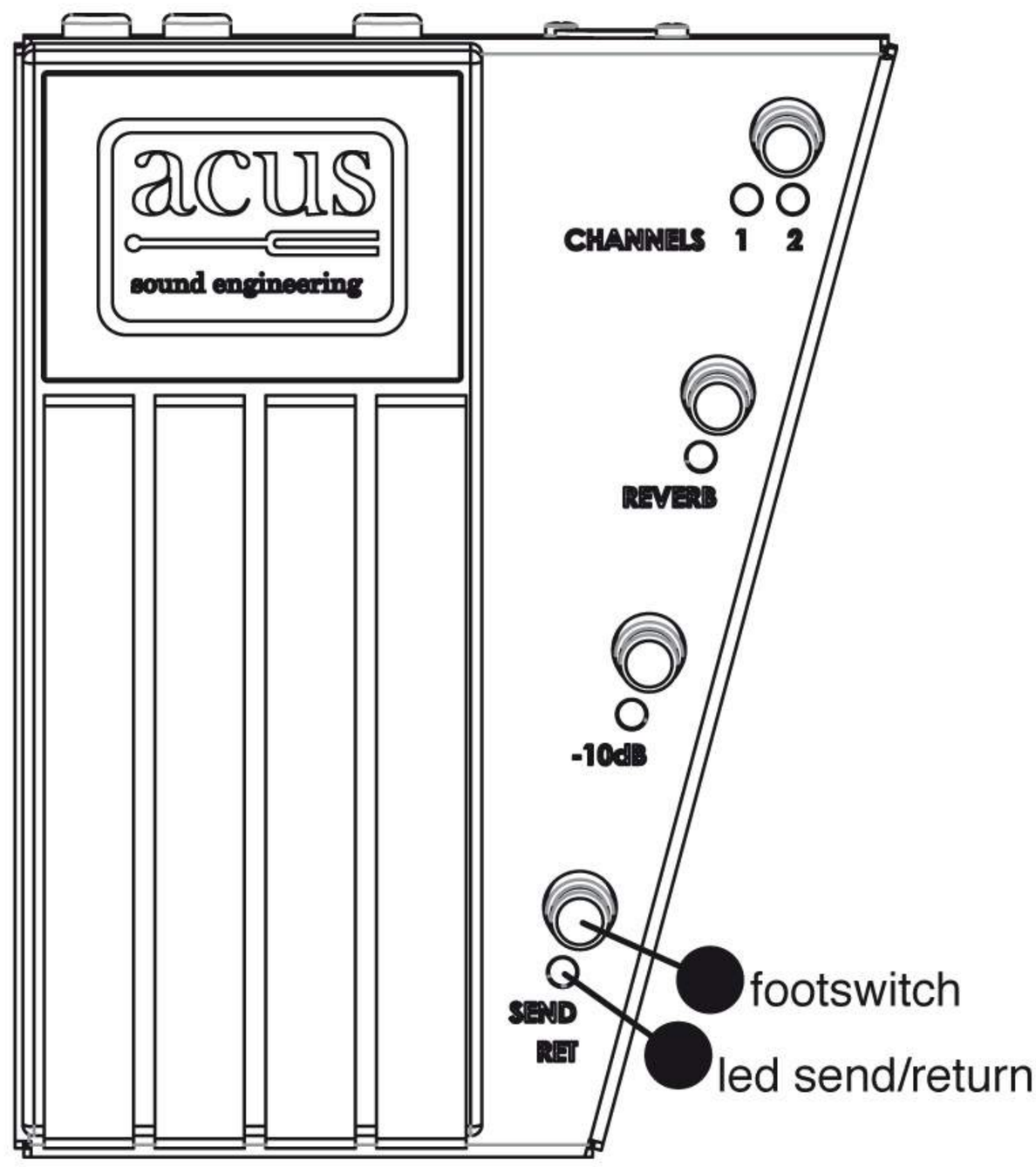

The SEND RET section permits activating or bypassing any external effected connected to the Coupled Channels of the master device.

Ch1
In this state the activation/bypass will be applied to the SEND/RETURN of the odd-numbered Coupled Channel of the master device.

Ch2
In this state the activation/bypass will be applied to the SEND/RETURN of the even-numbered Coupled Channel of the master device.

Ch1-2
In this state the activation/bypass will be applied to the SEND/RETURN of both Coupled Channels of the master device.

1. a single mono guitar

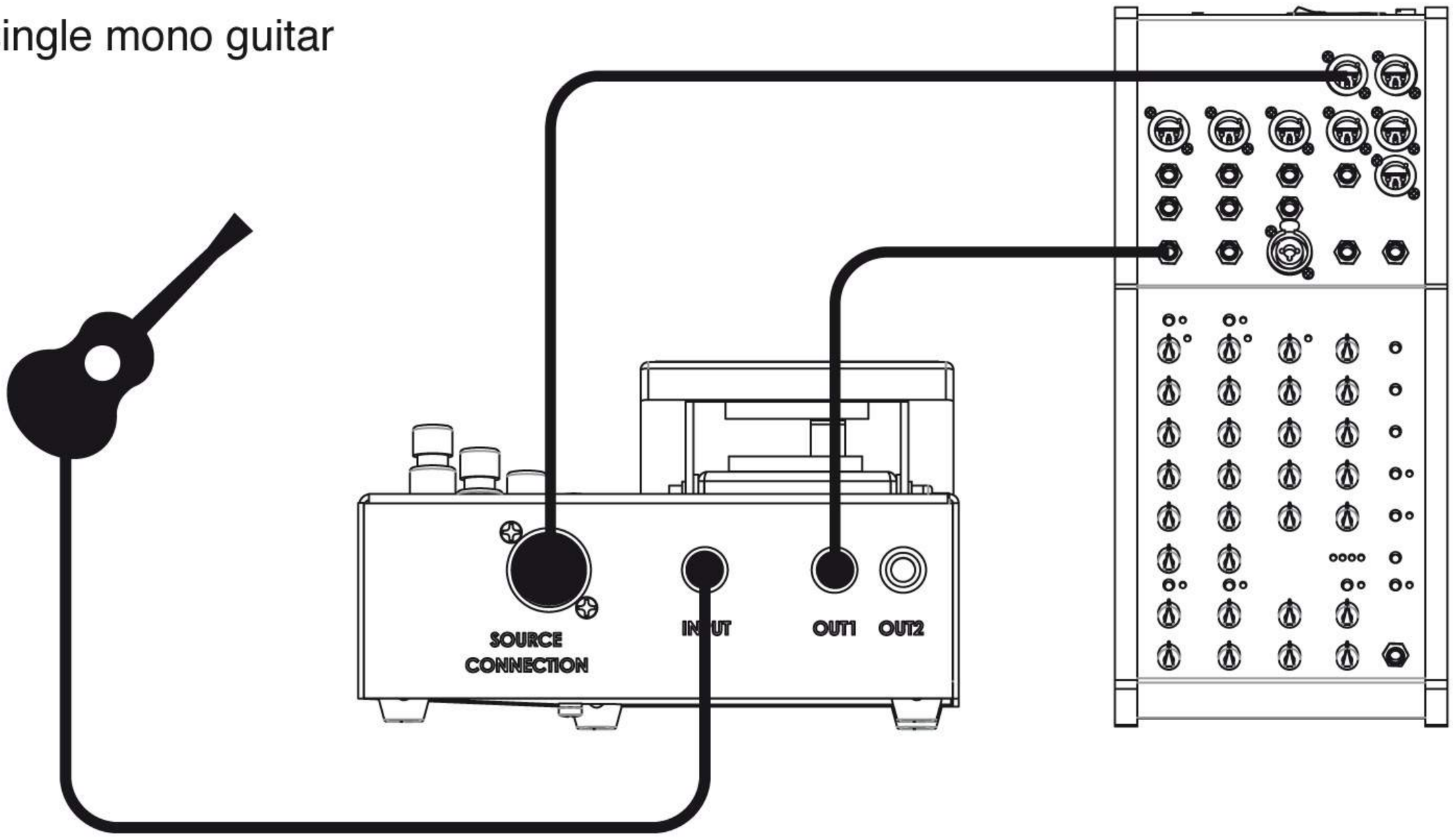

2. two mono guitars

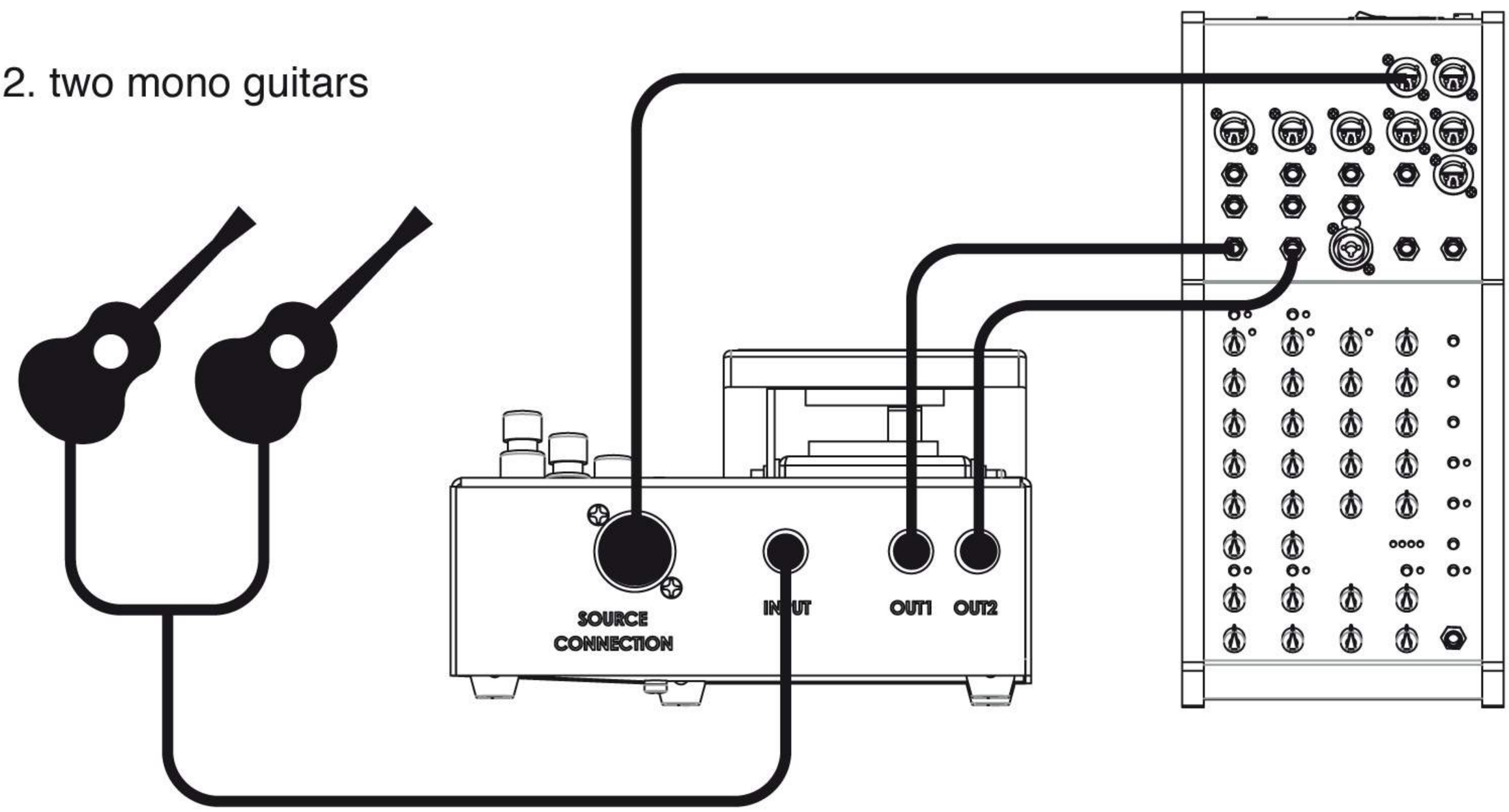

3. stereo guitar with two mono outputs

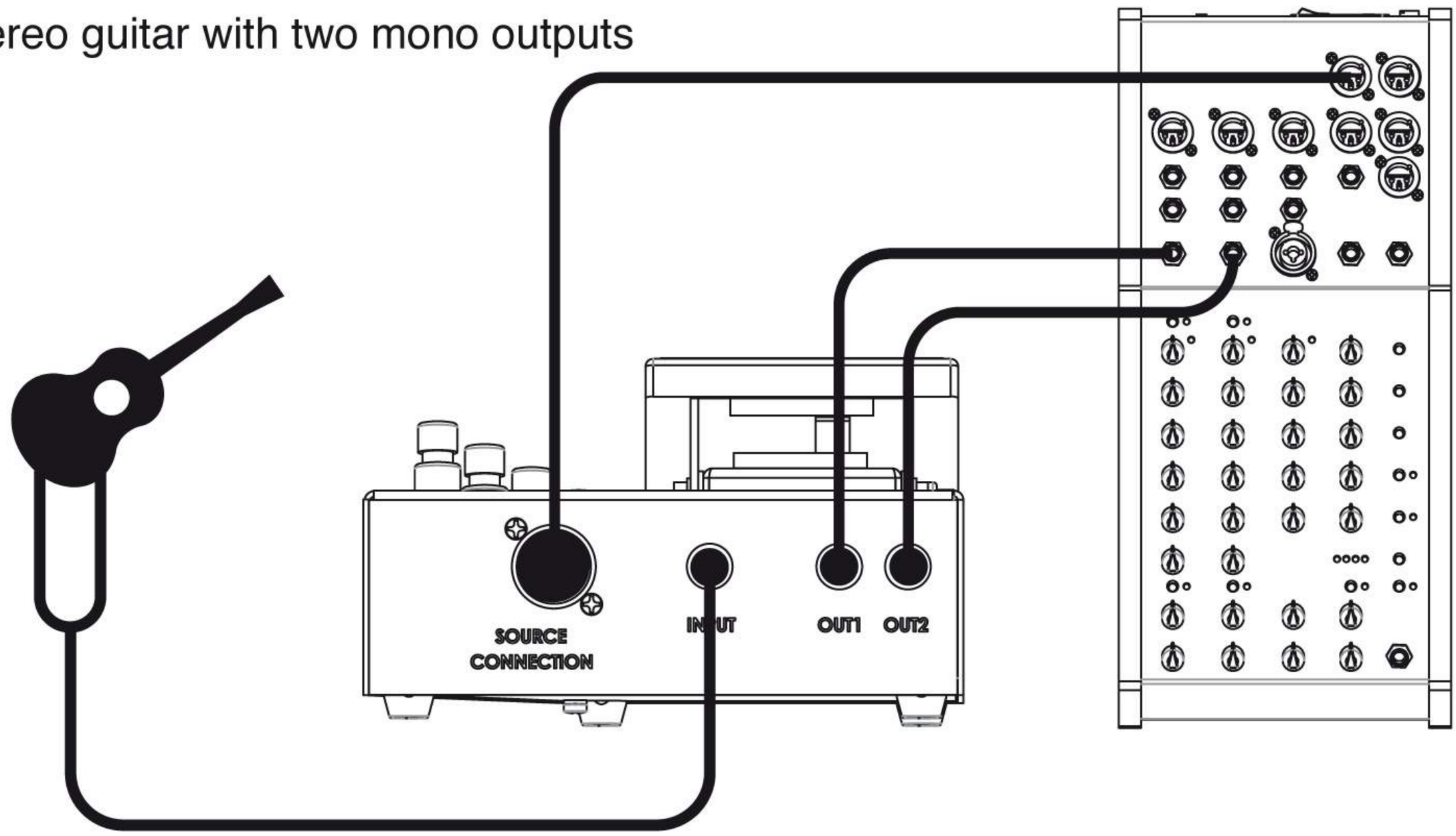

4. stereo guitar with a single stereo output

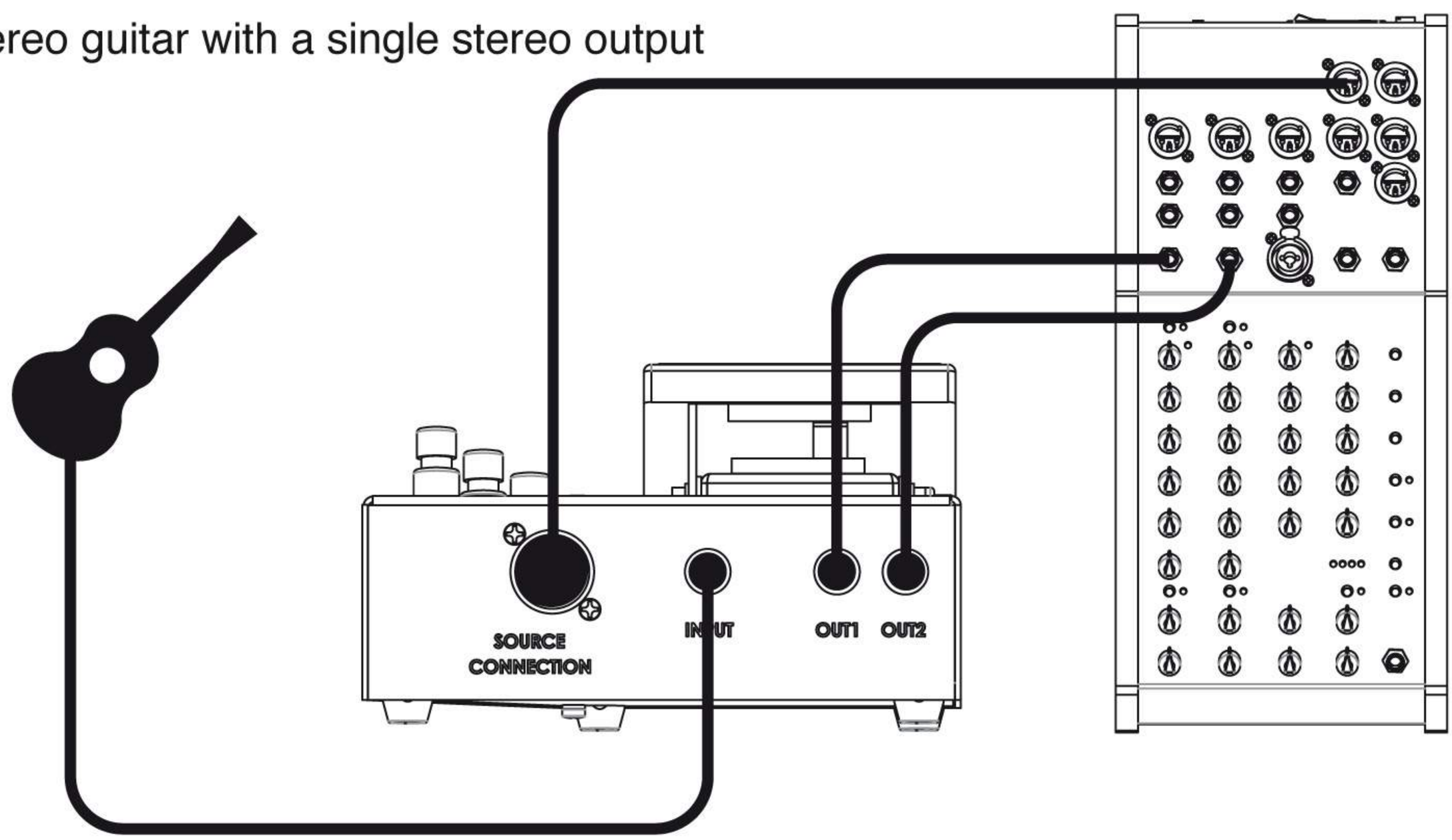

COUPLED CHANNELS

In master devices with more than 2 channels controllable by the Remote Control, the channels are divided into groups of two, called Coupled Channels.
Starting with channel 1, the first group is comprised of channels 1 and 2 (therefore channels 1 and 2 of the master device are Coupled channels). The second group is comprised of channels 3 and 4 (so channels 3 and 4 are also Coupled), and so on.
The Coupled Channels the Remote Control acts upon are a function of the footswitch port of the master device.

Connecting the Remote Control to either Footswitch 1 or Footswitch 2 port, it is possible to control Coupled Channels 1 and 2 of the master device.

Connecting the Remote Control to either Footswitch 3 or Footswitch 4 port, it is possible to control Coupled Channels 3 and 4 of the master device.

Connecting the Remote Control to either Footswitch 5 or Footswitch 6 port, it is possible to control Coupled Channels 5 and 6 of the master device.

SYSTEMS WITH MORE THAN ONE REMOTE CONTROL

The master device can handle at least 2 Remote Controls. However, using more than one Remote Control connected to a master device entails becoming aware of certain "restrictions" of use.

Ch1-2
To control a pair of Coupled Channels, only one of the relative Footswitch ports of the master device can be connected to a Remote Control.

If, for example, we have a master device with 4 controllable channels (e.g. the Stage Pre 6) connected to 3 Remote Controls (to the Footswitch 1, Footswitch 3 and Footswitch 4 ports, respectively), Coupled Channels 1 and 2 can operate in Ch12 mode because only one of the associated ports (Footswitch 1 and Footswitch 2) is connected to a Remote Control. On the other hand, Coupled Channels 3 and 4 cannot operate in Ch12 mode because both ports (Footswitch 3 and Footswitch 4) are connected to Remote Controls.
When 2 Coupled Channels cannot operate in Ch12 mode, the Remote Controls connected to the associated ports will remain in Ch1 mode **(the Channels 12 footswitch will have no effect).**

Reverb
It is possible to deactivate the reverb only if the master device is connected to only one single Remote Control. Otherwise, the reverb will remain active **(the Reverb footswitch on the Remote Control will have no effect).**

ACUS SOUND ENGINEERING SRLS
Via Remo Stortoni, 12D 62019 Recanati (MC) tel +39 071 9793109 fax +39 071 9793062