ewD1

Handling Guide

Handling Guide | Guide de Handling | Guida di impiego | Guía de manejo | Guia de utilização | Gebruiksaanwijzing | Инструкция по использованию | 使用指南 | 取扱いガイド | 취급 설명서 |

ME 3

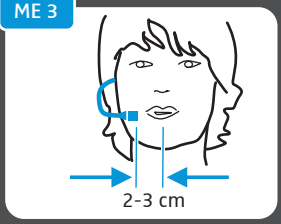

ME 2

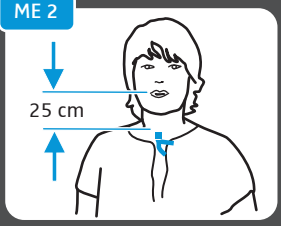

Min. Distance

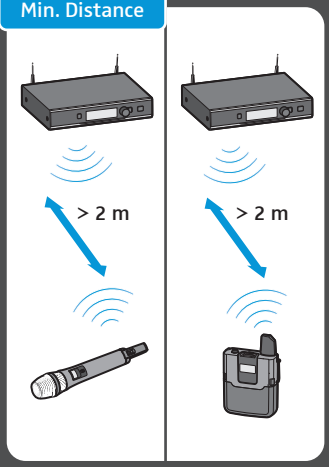

SKM

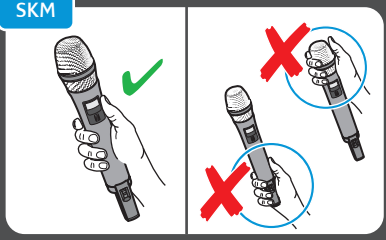

Guitar Pickup

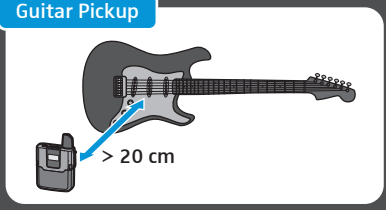

WiFi

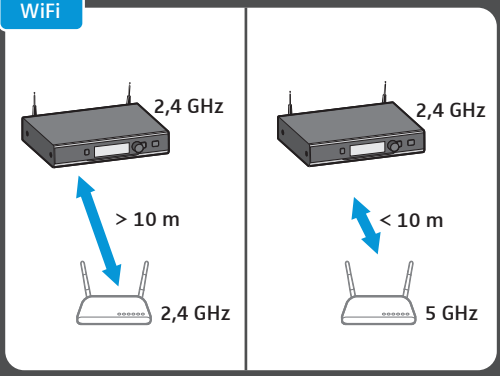

Antenna Position

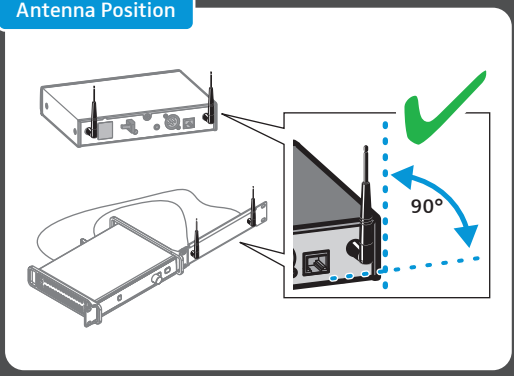

Audio Output

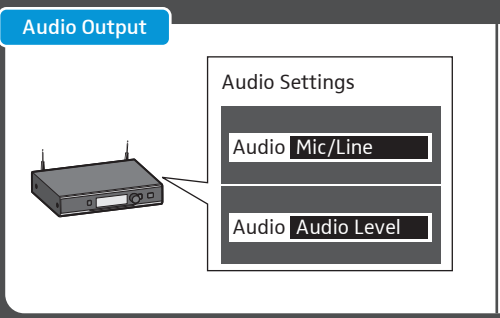

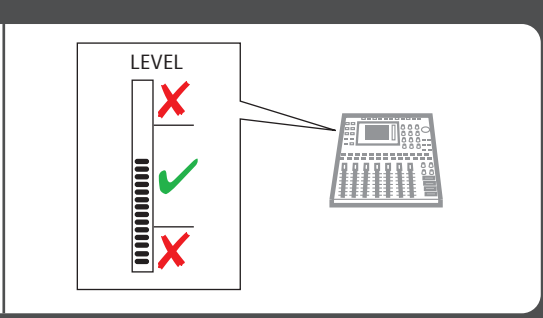

SENNHEISER

ewD1

Menu Structure

Menü-Übersicht | Menu Structure | Panoramica dei menu | Vista general del menú | Vista geral do menu | Menuoverzicht | Обзор меню | 菜单总览 | メニュー概要 | 메뉴 전체보기|

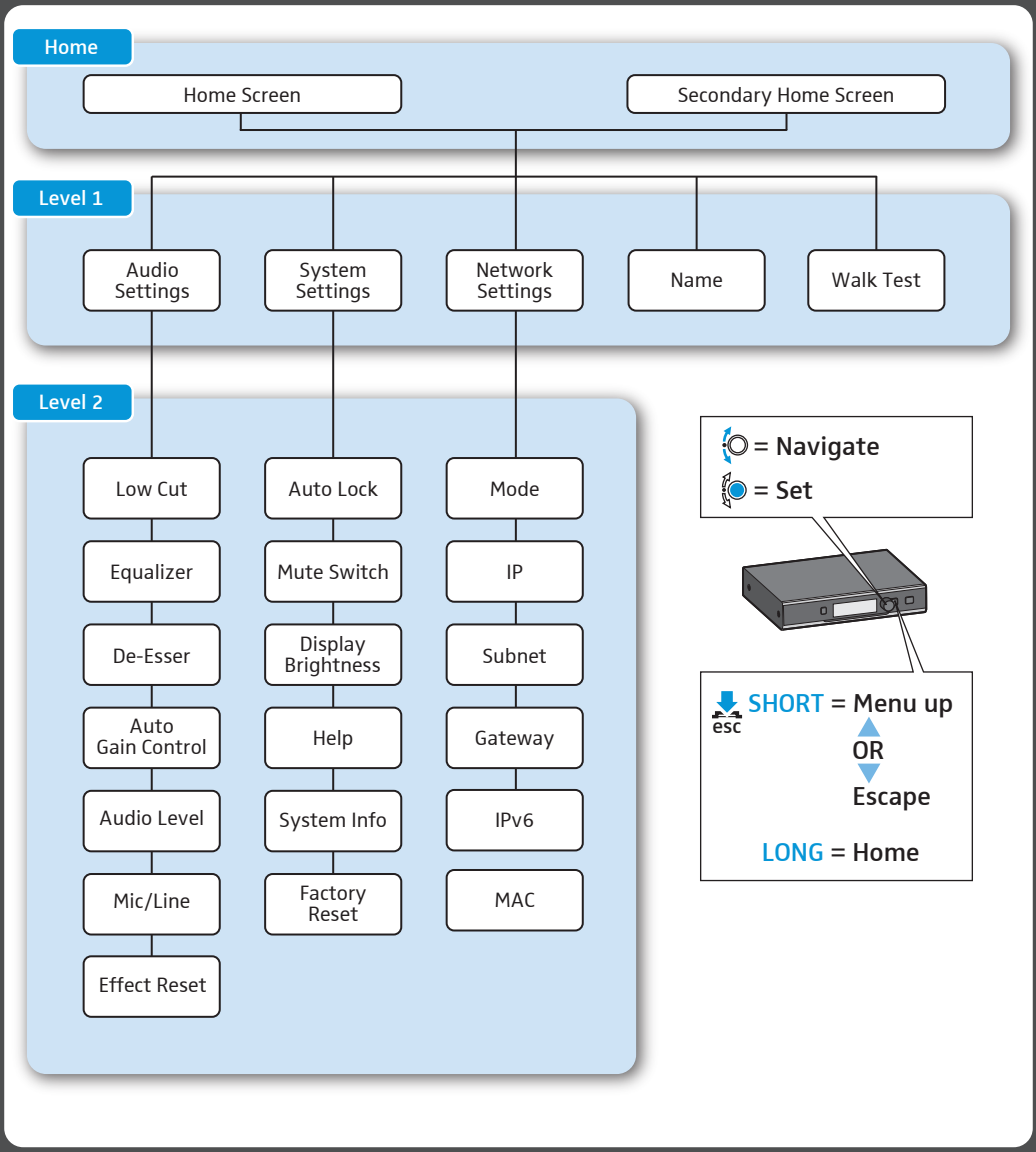

Sennheiser electronic GmbH & Co. KG

Am Labor 1, 30900 Wedemark, Germany, www.sennheiser.com
Printed in Germany, Publ. 11/14, 560036/A02