GA 3 Rack Mount Kit

FEATURES

- Extremely robust
- Easy to install

With this rack mount kit you can fix one or two G3 series devices.

ARCHITECT'S SPECIFICATIONS

Rackkit for the G3-series (for 1 or 2 devices of the G3-series)

TECHNICAL DATA

DELIVERY INCLUDES

1 rack mount kit

DIMENSIONS

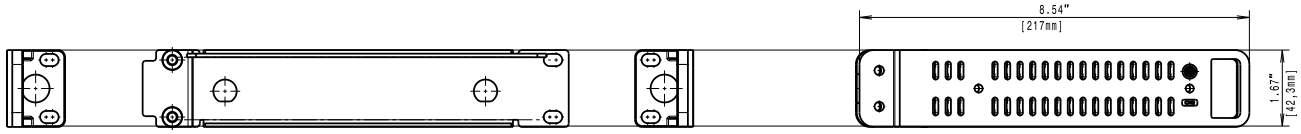

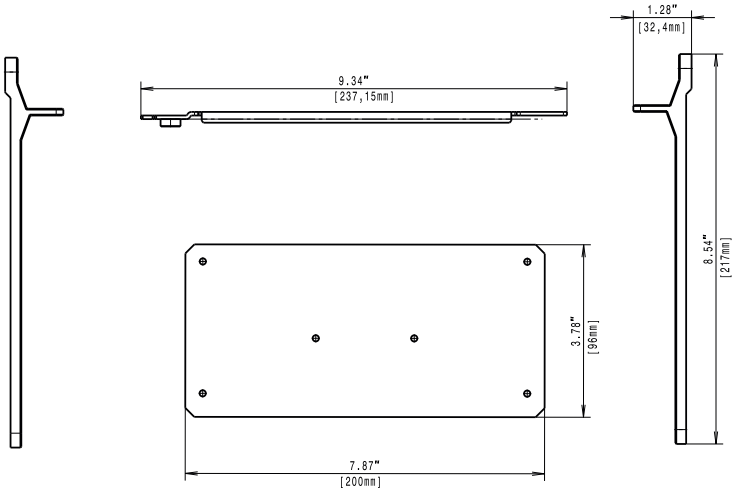

Contact your local Service Partner:

Sennheiser electronic GmbH & Co. KG
Am Labor 1, 30900 Wedemark, Germany
www.sennheiser.com

SENNHEISER

12/12 Sennheiser is a registered trademark of Sennheiser electronic GmbH & Co. KG. www.sennheiser.com. Copyright © 12/2012. All rights reserved. Errors and omissions excepted.