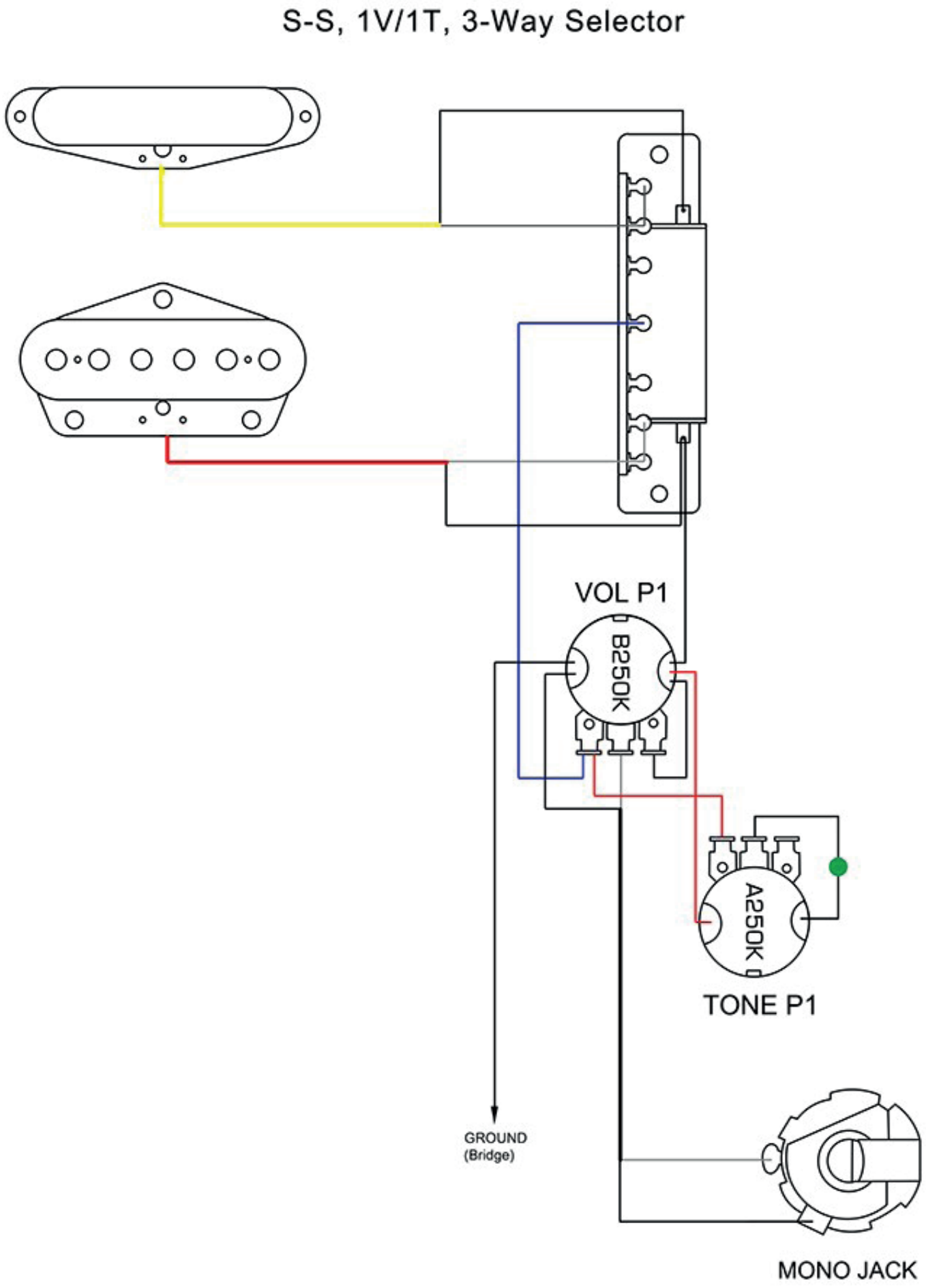KIT-TE-10 wiring diagram