BTM-1000 instruction manual

Boston®

Dear customer: Thank you for choosing BTM-1000 Quartz Metronome. Please read the user's manual carefully before using this product, and operate the product according to the manual. Please keep this manual for later reference.

⚠ CAUTION

- ◇ Do not open the casing for any reason as this may cause short circuit or malfunction of the product.
- ◇ Do not apply excessive force to the products. In the event of the product suffering breakage, be careful not to damage yourself with the broken pieces.
- ◇ Do not put in any liquid nor foreign object.
- ◇ Keep unit away from dust, extreme temperatures and humidity.
- ◇ When the unit is not in use for a long period of time, remove the battery to prevent leakage.

■ Panel and Functions

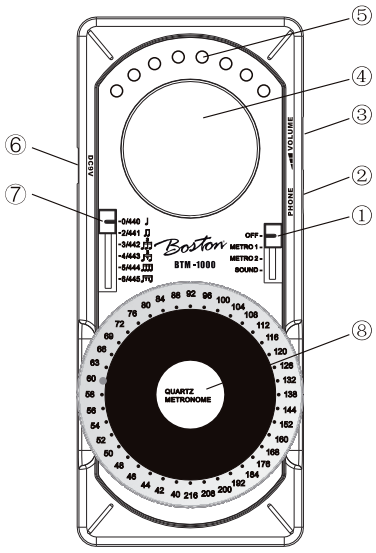

① Power switch/Metro 1/Metro2 /sound selector。
② Phone jack(insert the ϕ3.5mm earphone)
③ Volume wheel ④ Speaker
⑤ LED Lamps
⑥ AC adaptor jack(DC 9V,≥150MA ⊕—◉—⊖)
⑦ Beat/Value/A4 setting switch.
⑧ Dial:Tempo or note name adjusting

■ Battery replacement

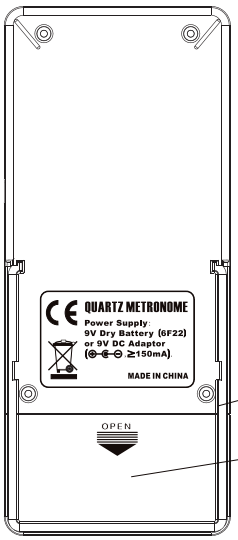

When the battery nears its end,the tempo/beat LED display becomes dim,and the volume of the sound becomes weak.In that case,the metronome may work improperly. Replace the battery immediately. Or use the metronome with the AC adaptor.

⑨Prop–up stand

⑩Battery hatch

●How to replace battery

1. Slide the power switch ① lightly to turn off the metronome,
2. Pull up the prop–up stand ⑨, and open the battery hatch ⑩ by pushing it rather strongly with a thumb in the direction of the arrow,
3. Remove the old battery,and replace it with a new one .When doing so ,check that the+ and – terminals of the battery are correctly connected.

■ Metronome function

A.Metro 1:

1. Slide the switch ① to METRO1 position.
2. Turn the dial ⑧ to choose the desired tempo.(40~216BPM)
3. Slide the switch ⑦ to choose the desired beat(0,2,3,4,5,6,)
4. Turn volume wheel ③ to adjust the volume.

B.Metro 2:

1. Slide the switch ① to METRO2 position.
2. Turn the dial ⑧ to choose the desired tempo.(40~216BPM)
3. Slide the switch⑦to choose the desired value(♩ ♫ ♫ ♬ ♫ ♬)
4. Turn volume wheel ③ to adjust the volume.

■ Tone generation function

1. Slide the switch ① to SOUND position.
2. Turn the dial ⑧ to choose the desired note name(B2~C6).
3. Slide the switch ⑦ to choose the desired A4 frequency (440~445Hz).
4. Turn volume wheel ③ to adjust the volume.

■ Specifications

Power source	: 9V Battery(6F22) or DC 9V Adaptor(⊕—◉—⊖)
Tempo range	: 40BPM~216BPM
Beat	: 0,2,3,4,5,6.
Value	: ♩ ♫ ♫ ♬ ♫ ♬
Calibration range	: A4=440Hz~445Hz
Display	:Red or Green LED
Tones generated	:B2~C6(Total 40 Notes)
Dimensions tuner body	:58 (W) x1 38 (H) x 32 (D)mm
Weight	:Approx.165g(including Battery)

Accuracy:metronome ± 0.1%, sound ± 1%

Appearance and specifications are subject to change without notice for improvement - E&OE