WORKING WITH

evolution wireless G3

A SIMPLE TO USE, COMPREHENSIVE GUIDE TO SETTING UP, CONFIGURING AND USING EVOLUTION WIRELESS G3 SYSTEMS.

SENNHEISER

APPLICABLE FOR USE IN THE U.S.
CONSUMER ALERT

Most users do not need a license to operate a wireless microphone system. Nevertheless, operating a microphone system without a license is subject to certain restrictions: the system may not cause harmful interference; it must operate at a low power level (not in excess of 50 milliwatts); and it has no protection from interference received from any other device. Purchasers should also be aware that the FCC is currently evaluating use of wireless microphone systems, and these rules are subject to change. For more information, call the FCC at **1-888-CALL-FCC** (TTY: 1-888-TELL-FCC) or visit the FCC's wireless microphone website at:

www.fcc.gov/cgb/wirelessmicrophones

Table of Contents

Introduction 4
The Parts of a Wireless System 5
The Transmitter 6
The Receiver 8
The Antenna 10
Wireless Monitor Systems 10
Accessorizing a Wireless System 11
Component Requirements 11
Frequency Concerns 12
Frequency Charts 14
Multi-Channel Wireless Mic System Hookup 20
Antenna Splitter and Mounting Packages 20
Putting Together a System 21
Frequently Asked Questions 24
Conclusion 26

Introduction

Wireless microphone and instrument systems have rapidly become standard equipment for musicians, Sennheiser's evolution wireless systems are the standard for musicians, broadcasters, theatre productions, reality television shows, and sound contractors alike. Sennheiser is the leading pioneer of wireless systems and over the years created Emmy Award-winning advances in the field of RF wireless technology. Sennheiser is proud to apply that same technology to the evolution wireless range of products which fit comfortably into virtually any budget. Traditionally, most wireless systems have offered the user a choice of fixed frequencies within a range of available VHF or UHF frequencies. While this approach makes for easy frequency selection, it offers little or no flexibility in circumventing interference or designing complex systems. Sennheiser evolution wireless G3 systems avoid the problems associated with RF (radio frequency) interference by being capable of tuning to a wide range of available UHF frequencies (up to 1,680 tunable frequencies). In addition, evolution wireless G3 systems offer easy and reliable system setup with the "Easy Setup" function. "Easy Setup" allows a receiver to scan the built-in frequency presets, choose a free one, and then program the transmitter over a wireless infrared link. These presets are specifically calculated not to interfere with each other, an undesirable effect which is known by the technical term "intermodulation." Because of their frequency agility, Sennheiser wireless systems give the user great flexibility to select available frequencies, even in the most complex multi-channel setups. This is ever important now and in the future as we see our RF environment populated by digital television stations as well as the likely possibility of other devices utilizing the UHF RF spectrum.

In addition, Sennheiser wireless systems feature a variety of versatile components and accessories which allow the user to adapt a system to nearly any imaginable need. From small-venue clubs and boardrooms to Broadway stages and stadium-sized concert halls, Sennheiser wireless is used with confidence every day by users the world over.

About UHF Wireless Systems

- **UHF** (Ultra High Frequency) transmission, the most popular format today, operates in the 470–698 MHz range. Because of its higher frequency range, UHF is not as susceptible to the interference typical of the VHF range, and is therefore a more stable format. Additionally, UHF systems are more convenient as they have shorter antennas than VHF systems.

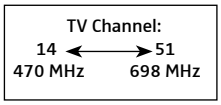

The Parts of a Wireless System

Every wireless system consists of at least three parts:

1) Transmitter

A transmitter which accepts the source input signal (mic or line), converts it into an RF (radio frequency) signal, and transmits it to the receiver.

G3 SKM Handheld Transmitter

G3 SKP Plug-On Transmitter

G3 SK Bodypack Transmitter

2) Receiver

A receiver, which receives the RF signal from the transmitter, converts it back into an audio signal which is linked to the output for mixing and amplification.

G3 EM Rack-Mount Receiver

G3 EK Camera-Mount Receiver

3) Antennas

Antennas are the transmission path for the transmitter to send the signal to the receiver and also for the receiver to pick up the transmitted RF signal. These may be either active or passive antennas, determined by the system configuration.

A1031-U
Passive Omnidirectional
UHF Antenna

The Transmitter

The transmitter has a fairly straightforward job: to take the source input signal from a microphone or line-level input (a guitar, for example), convert it into an RF signal, and transmit it. It sounds easy, but there are a number of variables involved in producing accurate and dependable transmissions.

While many other wireless systems use transmitters that may have enough power to work well on a small stage, they lack the operating range and performance for a professional event. With this in mind, Sennheiser transmitters are intentionally engineered to provide more than enough output power for virtually any application. Sennheiser equips the evolution wireless G3 series of transmitters with 30 mW of output power for at least 300 feet of range (line of sight). As a result, the user gets increased range and strong, stable transmission regardless of the conditions. Additionally, all of our transmitters feature metal housings, making them capable of enduring life on the road.

Most importantly, a transmitter must be able to convert the audio signal into an RF signal without losing sound quality or accuracy. Any time a signal is converted from one type (analog audio) to another (RF, for example) there is a danger of losing some aspect of the original sound or adding unwanted noise in the transition. To guard against this, Sennheiser employs a proprietary noise-reduction system called HDX™. HDX™ circuitry allows the transmitter to produce an RF signal that maximizes the microphone's signal-to noise ratio while avoiding the RF noise inherent in most systems. Once the transmitted RF signal reaches the receiver, it is re-converted into analog audio (using reciprocal receiver-side HDX™ technology) with stunning accuracy and quality. This results in audio that sounds as good as that of a wired microphone. As a result, Sennheiser G3 systems have an amazing frequency response of 25 Hz to 18 KHz (line).

Types of Transmitters

There are four basic types of wireless transmitters:

1) Bodypack transmitter

A bodypack transmitter is a versatile transmitter platform that can be used with a wide variety of input options. Sennheiser evolution bodypack transmitters (SK100G3, SK300G3, and SK500G3) all offer adjustable input sensitivity controls and can be used with both mic-level sources, such as lavalier or headset microphones, and also high-impedance line sources, such as electric or acoustic guitars. Because of their compact and rugged design, bodypack transmitters are widely used with lavalier microphones (ME2 Omni, ME4 Cardioid), and headsets (ME3-ew). Applications range from musical and theatrical stages everywhere to use on film and television sets.

ME3 Headset Mic

ME4 Lavalier Mic

G3 SK Bodypack Transmitter

2) Handheld transmitters

Handhelds are the most recognizable of transmitters since they most closely resemble traditional wired microphones. evolution wireless handheld transmitters (SKM100G3, SKM300G3, and SKM500G3) are specially designed to stand up to the rigors of live performance and offer exceptional sound. Sennheiser evolution wireless G3 handheld transmitters contain user-swappable dynamic and condenser elements, so one can easily adapt or upgrade the type of microphone capsule to a different type.

G3 SKM Handheld Transmitter

3) Plug-on transmitters

Plug-on transmitters are unique in that they convert a traditional wired microphone or line level signal into a wireless device. The plug-on transmitter in the evolution G3 line is the SKP100G3. This works for most plug-on applications, but does not provide 48v phantom power to those microphones which require it (see SKP2000 in the 2000 series for this). Plug-on transmitters are widely used for on-location newscasts, reality TV, movie sets, and also for sending outputs from mixing consoles to other Sennheiser receivers. For example, many wedding videographers ask the DJ or band if they can plug in their SKP100G3 and as a result send the sound directly to their camera or audio recording device.

G3 SKP Plug-On Transmitter

Since portable wireless transmitters are meant to roam around, they require battery power in order to work. Users should always use quality alkaline batteries for full power and longevity. Sennheiser's battery technology in evolution wireless products maintains a constant system voltage; therefore there is zero performance degradation as the batteries run down from use. If the device is on, the sound and range are still 100% as you would expect from new batteries regardless of battery level. All evolution wireless G3 portable transmitters and portable receivers also have charging contacts for use with the optional BA2015G2 battery and L2015G2 charger (except SKP100G3). For convenience, evolution wireless G3 transmitters feature convenient built-in battery gauges that allow the user to see the current battery level at a glance, so he or she can avoid running out of power. New for G3 is a standard feature called "battery telemetry" which simply means one can also see how much power is left in the transmitter by looking at an indicator from the receiver. This is extremely valuable for sound engineers who are curious how fresh the batteries are in a transmitter which may be already in use and not easily accessible.

4) In-ear monitor transmitters (rack mount)

In-ear monitor transmitters accept an audio signal, typically from a mixing console, and send it wirelessly to a portable receiver which a performer typically wears on their hip. The SR300IEMG3 is the half-rack spaced size transmitter in the evolution wireless G3 series.

G3 SR300IEMG3 Rack-Mount Transmitter

The Receiver

The brain of every wireless system, the receiver, is designed to receive the RF signal from the transmitter, convert it back into an audio signal, and output it to a PA system or audio device for mixing, recording, and amplification.

All Sennheiser wireless EM rack-mountable receivers employ True Diversity technology to ensure stable, uninterrupted wireless reception free from signal dropouts. In a True Diversity setup, a receiver features two independent receiver sections, each with its own antenna (rather than a single receiver module with a single antenna). By means of a comparison circuit, the receiver simultaneously checks both receiver sections many times a second and seamlessly selects the section with the strongest signal. This helps maintain a stable, high-quality signal, significantly reducing the possibility of dropouts. A True Diversity receiver typically costs more to design and manufacture than other "antenna switching" diversity systems, however Sennheiser has always been committed to bringing you the very best.

Another quality which distinguishes evolution wireless G3 receivers is their robust metal construction. In order to protect the sophisticated electronics inside and to provide professional road worthiness, evolution receivers are housed in metal, rather than in the plastic shells used in many other wireless systems. The benefits are obvious: exceptional durability and dependability, even in the roughest conditions.

Fixed receivers

There are three basic types of wireless receivers:

1) The fixed (rack-mount) receiver

The most common version, evolution fixed receivers (EM100G3, EM300G3, and EM500G3) are compact, half-rack sized units which can be mounted, along with optional AM2 front-mounted antennas, into a standard 19" equipment rack using the optional GA3 rack adapter.

G3 EM Receiver front view

2) Portable (camera-mount) receivers

Portable receivers are used specifically for film, television, and video applications in which a performer or newscaster is using a wireless transmitter and there is a need to send this back to a video camera or recording device. The EK100G3 is an example of a portable receiver. Portable camera-mount receivers are compact, lightweight, battery powered, and can be mounted directly onto a wide variety of motion-picture or video cameras which have a standard shoe mount for accessories.

G3 EK Camera Mount Receiver

3) In-ear monitor receivers (performer worn)

In-ear monitor receivers are worn by musicians to hear themselves and other instruments while performing. This concept allows the performer to hear their performance clearly while simultaneously keeping the stage volume down which reduces the risk of feedback. Many enjoy the fact they can hear clearly without straining to hear as you would when using conventional monitor wedge speakers. The EK300IEMG3 is the in-ear monitor receiver featured in the evolution wireless G3 series. This receiver is battery-powered and can receive a stereo, mono, or dual mono signal from a rack mounted transmitter (SR300IEMG3). These receivers have a large, easy-to-use knob to adjust volume during performance – robust and simple.

An exciting new feature for both the Sennheiser EK100G3 portable (battery powered) camera receiver and the EK300IEMG3 in-ear monitor receiver is called Adaptive Diversity. Adaptive Diversity means the receiver utilizes the output cable as a secondary antenna to ensure stable and uninterrupted wireless reception.

G3 EK In-Ear Monitor Receiver

Perhaps the most distinctive feature of evolution wireless systems is their proprietary HDX™ compander circuitry. Engineered to our exacting sound specifications, HDX™ is a sophisticated noise-reduction system that maximizes the microphone's dynamic range while minimizing undesirable sound artifacts and transmission noise. By compressing the audio in a 2:1 ratio (related to dB), an HDX™ compressed signal is transmitted above the level of noise inherent in the RF link. The result is remarkably clear, full sound with a better signal-to-noise ratio than a CD. The evolution wireless G3 series utilizes HDX™ technology to achieve an amazing 25 Hz – 18 KHz frequency response (line). With its HDX™-enabled components, evolution wireless G3 offers the freedom and ease of wireless without any compromise in sound quality. While digital wireless systems do not contain a compander circuit, they are subject to limited channels of operation due to the larger required bandwidth of the transmission link. Sennheiser HDX™ offers near-perfect audio reproduction while remaining flexible to have numerous channels operating simultaneously.

Once a receiver has translated the transmitter's signal back into an audio signal, it needs to provide adequate output options for mixing and amplification of the signal. evolution receivers feature a complete set of 1/4'' unbalanced and XLR outputs on all systems, which allow easy interfacing with any PA system.

Sennheiser integrates many powerful new features into the G3 series of receivers. The EM100G3 and EM500G3 both feature an onboard guitar tuner for convenience. A convenient front-panel headphone monitor output with volume knob is standard on the EM300G3 and EM500G3 receivers. This headphone output is handy for an engineer to check the quality and level of the audio from its transmitter before it is even routed to a mixing console or other device.

G3 systems also now introduce infrared syncing of transmitters which makes setup very easy. Once a receiver is set to an open channel, a push of the ''Sync'' button allows it to send the frequency and other parameters over to the transmitter in a flash. This simplifies setup time and takes the hassle out of programming transmitters. One push and a few seconds is all it takes.

The EM300G3 and EM500G3 receivers feature a unique Soundcheck Mode, which allows a user to conduct an accurate, quick on-stage RF and AF level check with a single microphone—without any assistance. The EM500G2 also offers a convenient front-panel Headphone Monitor Output, for easily checking the quality and level of the signal received from its complementary transmitter. The 300 and 500 series' Channel Naming function provides a convenient way to identify channels at the receiver. In addition, a Peak-hold Display provides quick and accurate level monitoring.

The Antenna

For most basic wireless applications, the antenna supplied with a system's receiver is more than adequate. As your wireless system grows, however, you may find you require one or more remote antennas to accommodate the increased number of channels. Receivers in large setups are most often rack-mounted. If the antennas are left inside the rack, performance can be degraded due to the rack and metal housings in the transmission path. Remote antennas allow the receiver antennas to be placed in a location which provides better reliability and reception.

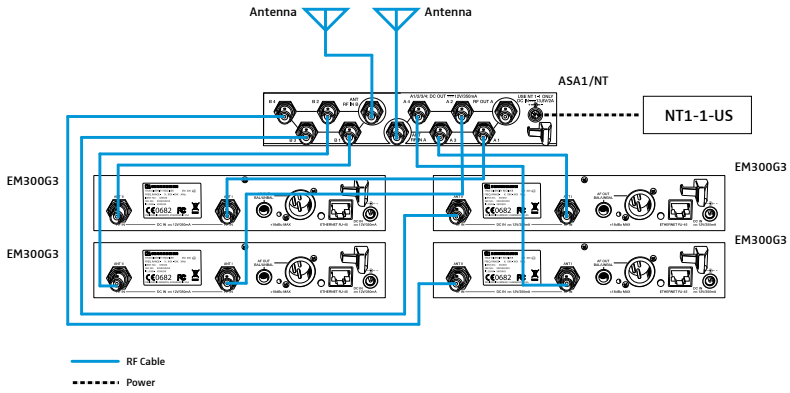

Diagram illustrating the ASA1's ability to feed multiple modules.

In order to manage additional antennas, Sennheiser offers a variety of useful tools. Antenna splitters, such as the ASA1, allow a single pair of antennas to "feed" multiple receivers. The new active ASA1 allows wideband splitting of antennas and can be daisy chained for use with multiple channel setups. Because the ASA1 is active, boosters are typically not required unless the antenna cable runs are in excess of about 90 feet.

Antenna combiners, such as the AC3, are similar to splitters but are used only with wireless monitoring systems to combine up to four transmission signals onto a single transmit antenna.

Both the ASA1 and AC3 power the G3 receivers/transmitters they are connected to right through the antenna cable – a cool concept!

A1031-U

Passive, omni directional UHF antenna which can be mounted on a stand. Receives/transmits signals in a Taurus or "donut" shaped pattern.

ASA1

1:4 active antenna splitter. Allows up to four receivers to operate off a pair of antennas.

Wireless Monitor Systems

Another revolution in the world of live sound is the widespread use of wireless monitor systems. Since such systems offer better signal-to-noise ratios without feedback, they provide the user with great freedom of movement and control. In addition, wireless monitor systems provide excellent hearing conservation since they do not need to be loud in order to "cut through the mix." Add in great cost-efficiency, space-savings, and portability when compared to hauling ordinary monitors, and you can easily see why wireless monitoring is so popular.

The evolution wireless G3 monitor system is engineered with the same principles of high quality and durability as all other evolution wireless G2 systems. The SR300G3 transmitter features 1/4" and XLR balanced inputs for easy compatibility, and robust output power (30 mW) for extended range and signal stability. With preset UHF frequencies (from the user-selectable 1,680 available) and multiple channel operation, the system can provide wireless monitoring for every performer on stage. Engineers will love the built-in Ethernet port for computer control with Sennheiser WSM software for both PC and Mac computers. The unique Focus feature allows you to switch between standard stereo (2-channel) monitoring and Focus Mode, which provides limited mixing capabilities (the ability for performers to pan between their vocals and the instrumentation, for instance). Frequency number and channel number display functions provide clear indication, and the system's channel Naming function allows you to add a custom name to each preset. In addition, convenient front-panel headphone monitoring allows for quick and easy monitoring of each channel's signal.

The compact EK300IEMG3 bodypack receiver provides each performer with clear, interference-resistant monitoring. Like the transmitter, it features frequency number and channel number display and a Focus control, which allows the user to adjust the balance of the system's two channels to create a custom monitor mix. The receiver also features an adjustable Audio Limiter, which restricts volume to protect against hearing loss. The evolution Wireless Monitor System comes supplied with high quality IE4 stereo ear phones, which provide lightweight comfortable listening, but can also be used with custom ear molds (ordered separately) for the ultimate in wireless comfort, fit and performance.

SR300IEMG3 Transmitter

EK300IEMG3
Bodypack Receiver

Accessorizing a System

Sennheiser offers many useful accessories for the evolution wireless G3 series.

GA3 Rack Adapter

For convenient side-by-side mounting of up to two fixed EM receivers, SR transmitters, ASA1 splitters or AC3 combiners in a standard 19'' rack.

AM2 Front Antenna Mount

For use with the GA3 for use with fixed receivers or transmitters in a standard19'' rack-mounting arrangement, the AM2 is used to mount antennas in the front. This enhances performance over having the antennas ''buried'' inside the rack.

ASA1 Antenna Splitter/DC Power Distributor

Active antenna splitter that feeds RF signal and DC power through the RG58 cable to up to four fixed receivers simultaneously. This reduces the number of antennas required and makes for a very ''clean'' installation. Two ASA1 units can be coupled to feed up to eight receivers from a single pair of antennas. More than eight receivers can be fed from a single pair of antennas when feeding the output of an ASA1 into two or more ASA1 units.

Component Requirements

Generally speaking, wireless systems are sold as sets which contain one transmitter and one receiver. If you require more than a single transmitter or receiver, there are several important points you must consider. First, a transmitter and receiver must be able to tune to the same frequency in order to work together. For example, a VHF transmitter cannot work with a UHF receiver. Secondly, transmitters and receivers must both use the same compander circuitry in order to work together. Since the transmitter's compander circuit dictates the way the audio is ''compressed'' into an RF signal, the receiver on the other end must have compatible circuitry to ''uncompress'' the RF signal into a high-quality audio signal. evolution wireless systems employ Sennheiser's proprietary HDX™ compander circuitry for superior signal-to-noise ratios and quiet operation. evolution components can only be used with other HDX™-enabled Sennheiser components. Because of the flexibility of HDX™, all evolution components are compatible with one another regardless of generation (G1/G2/G3) as long as you can tune to the same frequency. In addition, evolution components are compatible with the 2000 series. As a result, evolution wireless G3 offers a high degree of frequency agility in each range (1680 frequencies). This allows you to easily configure everything from a basic setup to large multichannel systems, depending on the surrounding RF environment.

Frequency Concerns

The successful operation of an RF wireless system depends greatly on two things:

1) The frequencies to be used must be free of inteference from other signals in the air. Frequency agile wireless systems (those offering a high number of user-selectable operating frequencies) provide the most effective means of avoiding such interference.

2) The frequencies to be used must be calculated exactly to avoid interfering with each other. Not only do these frequencies need to be spaced apart far enough, they must also be carefully calculated to avoid creating harmonics which can cause other frequencies to have problems such as dropouts and static "hits." These undesirable effects are known as "intermodulation." G3 makes this simple by offering preset frequencies called "CHANNELS" which reside in a frequency "BANK." When operating multiple systems in the same frequency range (i.e. range "A" 518-558 MHz), you should always run these systems in the same BANK.

Although evolution wireless G3 is one of most frequency agile products on the market, care must be taken in selecting your systems' operating range and frequencies to insure that interference-free operation is achieved.

Location

Geographic location plays a major role in the effective performance of your wireless microphone and/or monitoring system. The primary source of airwave competition is from television broadcast transmission towers. It is very likely that most locations where a wireless system is to be used will be within the effective transmission range of at least one, if not more, of these television broadcasting stations. In planning your systems' frequency requirements, one should determine what frequencies are in use by local television stations.

Local television stations are not the only transmissions that may cause interference. Nearby wirelesss communication devices and other wireless microphone systems may also introduce obstacles when planning an effective wireless system. Having a complete knowledge of your RF environment (the possible sources of RF interference including their frequencies), as well as a functional frequency coordination scheme (using the BANK system) are very important when planning a wireless microphone system. Sennheiser's website (HYPERLINK "http://www.sennheiserusa.com" www.sennheiserusa.com) has an interactive frequency finder which can assist you in finding which local TV stations are broadcasting in your area.

Effective frequency coordination is a means of scientifically determining the compatibility of multiple RF systems operating simultaneously. It is recommended that you follow our frequency coordination schemes when planning a multi-channel wireless system within your RF environment.

DTV (Digital Television

Now that the FCC has mandated that all television broadcasts are digital, it is more important than ever to ensure you are on a clear frequency. Additionally, portions of the UHF spectrum are now reallocated by auction and/or emergency operation. As of June 12th, 2010, the FCC has made it illegal to operate wireless devices in the 698-806 MHz range.

It's important to remember when incorporating evolution wireless G3 into a wireless system, that each evolution wireless G3 system is manufactured to operate within a particular frequency range (A, B, G etc.) Each range is broken down into 1,680 user-selectable frequencies.

Remember, we always want to run multiple systems in the same range (e.g. A, B, G) in the same BANK. You would use the same BANK but different channels under that bank. The number of preset channels per BANK depends on what series of evolution G3 you have. For example, the "LE" series has up to 6 channels per BANK while the 500 series has up to 32 channels per BANK. The following evolution wireless G3 frequency combination charts which also may aid in determining frequency compatibility if you are using evolution wireless G3 with wireless products made by other manufacturers. When using multiple evolution wireless G3 systems, it is important to make certain that all channels in your system follow this compatibility scheme to guarantee that your system will operate interference free.

Steps for Auto Tuning evolution wireless G3 Systems

1. On the receiver, press SET to enter menu. Press up/down buttons to select ''Easy Setup''. Press SET and choose ''Scan New List.'' Press SET to start scan.
2. After the scan is completed the receiver will suggest a BANK to choose with the most free channels. Press SET. Now select a channel using the up/down arrows and press SET to confirm. The receiver will say ''STORED.''
3. Tap the POWER button to exit the menu. The frequency chosen will be displayed. You should see zero RF activity on the meter (meaning you are on a free channel).
4. Power up the transmitter you wish to pair with the receiver. Become familiar where the infrared (IR) window is located. On a G3 handheld transmitter, the window is located on the display. On a body-pack transmitter, it is located under the flap just to the right of the ON/OFF button.
5. Press the ''SYNC'' button on the front of the receiver and the receiver will enter SYNC mode. Simply hold the handheld or bodypack IR window facing the left side of the receiver display about 1'' to 2'' away.
6. If the SYNC is successful, you should see a check mark on the receiver screen. If you see an ''X'', it indicates the sync failed and you should repeat step 5.
7. After a successful SYNC, you should see the frequency match on both the receiver and transmitter.
8. If setting up another system in the same frequency range (A/B/G), you can repeat the process from Step 1. Just be sure to choose the same BANK number as you did in step 2 to ensure compatible operation, and a different channel number.

How To Use the Following Charts

These charts represent the tuning scheme of each range and are for reference in determining the suitability of a particular range for your geographic location.

Transmitters and receivers are available in a 42 MHz UHF frequency range with a total of 1,680 transmission/receiving frequencies. Transmitters and receivers have 20 frequency banks respectively. Each of the channels in the frequency banks has been factory-preset to a frequency. The frequency presets within one nfrequency bank are intermodulation-free. These frequencies cannot be changed. The frequency banks "U" (ew 100: bank "U", ew 300/ew 500: banks "U1"–"U6") allow the user to store individual frequencies which are freely selectable in 25-kHz steps. It might be that nthese frequencies are not intermodulation-free. The following table lists the frequency presets in the frequency banks "1" to "20":

Frequency Range A 516–558 MHz

US TV Channel
Ch. 21 (512–518 MHz)
Ch. 22 (518–524 MHz)
Ch. 23 (524–530 MHz)
Ch. 24 (530–536 MHz)
Ch. 25 (536–542 MHz)
Ch. 26 (542–548 MHz)
Ch. 27 (548–554 MHz)
Ch. 28 (554–560 MHz)

ew100 ew300 ew500

Channel	Bank 1	Bank 2	Bank 3	Bank 4	Bank 5	Bank 6	Bank 7	Bank 8	Bank 9	Bank 10
1	518.200	524.250	530.100	536.350	542.900	548.850	554.100	518.125	516.000	516.000
2	518.700	524.800	530.800	537.700	543.600	549.800	554.550	518.500	516.875	516.400
3	519.650	525.550	531.650	538.650	544.450	550.250	555.200	519.000	517.500	517.000
4	520.450	526.550	532.050	539.300	545.050	551.100	555.700	519.625	520.175	517.800
5	520.900	527.700	533.050	540.100	545.450	551.500	556.450	520.375	522.625	519.000
6	521.600	528.100	533.550	540.700	546.200	552.150	557.050	521.375	524.800	520.600
7	522.000	529.050	534.850	541.100	546.750	552.950	557.450	523.375	529.625	522.800
8	522.900	529.500	535.750	541.800	547.700	553.500	558.000	525.875	530.825	526.000
9	528.800	516.950	517.300	518.900	516.900	524.050	516.300	534.125	540.525	528.400
10	535.100	535.250	523.300	519.800	524.750	533.500	524.750	535.375	553.625	533.200
11	552.350	536.750	547.200	550.100	551.250	537.700	533.550	537.500	516.375	537.200
12	531.600	554.900	551.050	555.050	553.200	556.900	538.250	540.125	518.425	541.600
13	539.900	519.200	520.150	516.150	518.100	518.950	517.200	541.750	520.975	549.000
14	540.500	540.400	520.800	516.900	521.900	522.300	526.800	521.000	521.525	552.400
15	542.900	541.850	521.250	524.600	522.800	523.450	529.550	522.125	523.350	519.475
16	543.950	542.650	521.850	525.500	523.850	527.250	532.700	522.500	526.375	521.300
17	546.050	545.150	523.900	526.550	528.450	528.400	538.950	524.125	531.400	523.850
18	546.600	546.050	525.000	545.300	528.950	529.000	544.800	524.500	532.250	527.625
19	550.850	547.250	553.150	546.500	531.900	532.600	547.200	525.125	533.975	530.150
20	552.950	548.150	555.700	549.350	553.650	534.100	550.350	534.500	534.725	531.175
21	553.700	550.400	556.900	556.250	555.000	538.300	530.250	535.000	536.200	539.950
22	556.100	557.900	557.550	520.550	519.500	545.100	531.350	536.125	543.875	544.975
23	524.750	527.000	528.900	523.100	521.300	521.350	534.900	536.750	545.050	547.675
24	529.500	519.650	539.250	531.800	525.500	529.750	537.750	537.875	533.375	
25	533.900	521.100	541.900	535.850	527.750	531.850	542.550	538.750		
26	543.350	530.250	549.250	551.600	533.300	539.500	549.350	539.125		
27	545.150	534.500	550.050	552.500	540.600	543.400		539.750		
28	547.550	546.750	550.450	553.250	555.900	544.500		540.625		
29	548.900	551.450	557.950			557.400		541.000		
30		552.200								
31										
32										

- ew 100 G3 series: the first 12 channels in a frequency bank
- ew 300 G3 series: the first 24 channels in a frequency bank
- ew 500 G3 series: max. 32 channels in a frequency bank

The following factory-preset default settings can be recalled any time via the Reset menu item: Auto Lock inactive, Sensitivity SK –30 dB - SKM –18 dB, RF Power standard (ew 300, ew 500), Mute Mode AF On/Off (SK: all, SKM: 300), Squelch low/5 dBµV, AF Out EM +18 dB, EK 0 dB, Equalizer flat, Guitar Tuner inactive (ew 100, ew 500), Name name of the series, Pilot Tone will not be reset, User banks "U" will not be reset, Sync Settings inactive (ew 300, ew 500), Warnings active (ew 300, ew 500), IP Address auto-IP (ew 300, ew 500)

Frequency Range A 516–558 MHz continued

US TV Channel
Ch. 21 (512–518 MHz)
Ch. 22 (518–524 MHz)
Ch. 23 (524–530 MHz)
Ch. 24 (530–536 MHz)
Ch. 25 (536–542 MHz)
Ch. 26 (542–548 MHz)
Ch. 27 (548–554 MHz)
Ch. 28 (554–560 MHz)

ew100 ew300 ew500

Channel	Bank 11	Bank 12	Bank 13	Bank 14	Bank 15	Bank 16	Bank 17	Bank 18	Bank 19	Bank 20
1	516.100	516.200	516.000	516.150	516.275	516.375	516.100	516.000	518.100	517.500
2	516.500	516.600	516.400	516.550	516.675	516.775	516.975	516.400	518.475	517.875
3	517.100	517.200	516.900	517.050	517.175	517.275	517.600	517.000	518.975	518.375
4	517.900	518.000	517.500	517.650	517.775	517.875	520.275	517.800	519.600	519.000
5	519.100	519.200	517.950	518.100	518.225	518.325	522.725	519.000	520.350	519.750
6	520.700	520.800	518.500	518.650	518.775	518.875	524.900	520.600	521.350	520.750
7	522.900	523.000	519.150	519.300	519.425	519.525	529.725	522.800	522.975	522.375
8	526.100	526.200	520.500	520.650	520.775	520.875	530.925	526.000	524.975	524.375
9	528.500	528.600	521.200	521.350	521.475	521.575	540.625	528.400	527.100	526.500
10	533.300	533.400	522.650	522.800	522.925	523.025	553.725	533.200	530.100	529.500
11	537.300	537.400	523.400	523.550	523.675	523.775	516.475	537.200	531.350	530.750
12	541.700	541.800	525.100	525.250	525.375	525.475	518.525	541.600	534.475	533.875
13	549.100	549.200	526.500	526.650	526.775	526.875	521.075	549.000	537.975	537.375
14	519.575	557.800	529.100	529.250	529.375	529.475	521.625	552.400	542.725	540.125
15	521.400	519.675	530.900	531.050	531.175	531.275	523.450	519.475	548.350	548.125
16	523.950	521.500	532.050	532.200	532.325	532.425	526.475	521.300	553.350	552.000
17	527.725	524.050	533.950	534.100	534.225	534.325	531.500	523.850	521.850	521.875
18	530.250	527.825	538.600	538.750	538.875	538.975	532.350	527.625	522.475	523.750
19	531.275	530.350	543.150	543.300	543.425	543.525	534.075	530.150	523.850	525.500
20	540.050	531.375	543.950	544.100	544.225	544.325	534.825	531.175	524.350	527.000
21	545.075	540.150	547.900	548.050	548.175	548.275	536.300	539.950	527.725	527.375
22	547.775	545.175					543.975	544.975	528.975	528.375
23		547.875					545.150	547.675	529.475	528.750
24							533.475	541.975	532.225	531.375
25								543.725	532.725	531.875
26								546.550	538.475	533.375
27									539.100	538.125
28									539.600	538.625
29									540.975	540.500
30									542.225	542.625
31									543.850	
32										

Frequency Range B 626–668 MHz

US TV Channel
Ch. 40 (626–632 MHz) **Ch. 44 (650–656 MHz))**
Ch. 41 (632–638 MHz) **Ch. 45 (656–662 MHz)**
Ch. 42 (638–644 MHz) **Ch. 46 (662–668 MHz)**
Ch. 43 (644–650 MHz)

ew100 ew300 ew500

Channel	Bank 1	Bank 2	Bank 3	Bank 4	Bank 5	Bank 6	Bank 7	Bank 8	Bank 9	Bank 10
1	626.300	632.350	638.450	644.550	650.200	656.350	662.750	632.925	626.000	626.000
2	626.750	632.800	639.050	645.450	650.750	656.800	663.150	635.425	626.875	626.400
3	627.450	633.750	639.450	646.650	651.600	657.450	663.950	639.350	627.500	627.000
4	628.450	634.350	640.200	647.200	652.800	657.850	664.500	640.050	630.175	627.800
5	628.900	635.700	640.750	648.050	653.250	659.050	665.650	648.500	632.625	629.000
6	629.700	636.200	641.550	648.500	654.300	659.900	666.100	653.950	634.800	630.600
7	630.800	636.900	642.600	649.150	654.700	660.900	667.050	655.350	639.625	632.800
8	631.750	637.300	643.450	649.650	655.600	661.600	667.550	656.250	640.825	636.000
9	640.550	628.850	628.550	630.500	630.500	626.250	627.550	659.025	650.525	638.400
10	646.100	641.600	649.700	636.050	641.750	637.000	629.750	665.175	661.700	643.200
11	653.300	647.150	655.700	659.600	665.300	640.900	642.450	665.675	663.625	647.200
12	659.150	665.300	663.050	666.800	665.900	652.150	649.700	667.275	668.000	651.600
13	635.450	643.100	629.000	627.950	626.150	627.050	626.250	631.200	626.375	659.000
14	636.500	643.850	630.200	632.300	627.500	628.000	630.750	633.750	627.900	662.400
15	642.650	648.200	634.100	632.900	628.100	631.350	632.950	636.025	628.425	667.600
16	651.200	652.250	648.050	635.450	629.900	631.900	634.450	638.500	629.125	628.175
17	655.100	653.000	650.600	638.300	631.250	632.700	637.300	640.450	629.575	629.475
18	658.100	656.450	657.350	651.950	633.050	638.750	638.950	643.650	630.975	631.300
19	659.900	658.250	661.400	653.300	633.800	643.700	640.450	653.000	631.525	633.850
20	661.550	661.250	662.600	660.200	636.050	647.300	644.250	655.875	633.350	637.625
21	662.300	662.300	664.250	661.850	636.800	653.100	647.450	660.050	636.375	640.150
22	665.750	663.050	666.050	662.450	646.550	666.100	653.850	661.200	641.400	641.175
23	666.650	664.550	666.500	665.150	658.850	667.050	656.100	662.500	642.250	649.950
24	667.700	666.950	667.700	666.200	660.200	667.850	661.200	667.700	643.975	654.975
25	632.900	626.150	626.450	626.150	626.600	629.400	626.800	636.750	644.725	657.675
26	638.150	626.900	627.650	633.950	635.450	630.450	630.150	641.425	646.200	660.975
27	646.850	628.100	632.000	640.850	639.350	636.250	636.450	651.150	653.875	661.900
28	650.150	641.150	633.200	642.200	649.400	639.500		637.800	655.050	664.625
29	651.800	653.600	656.450	643.250	658.250	643.250		639.800	660.625	665.250
30	656.150	655.700	659.450	659.150	661.250	650.650		640.850	661.275	664.125
31	663.500	660.350	660.650	663.650	662.450	663.700		651.350	667.050	663.375
32	664.550	665.900	667.250	667.550	664.100	664.500		659.100	643.375	

Frequency Range B 626–668 MHz continued

US TV Channel
Ch. 40 (626–632 MHz)
Ch. 41 (632–638 MHz)
Ch. 42 (638–644 MHz)
Ch. 43 (644–650 MHz)
Ch. 44 (650–656 MHz))
Ch. 45 (656–662 MHz)
Ch. 46 (662–668 MHz)

ew100 ew300 ew500

Channel	Bank 11	Bank 12	Bank 13	Bank 14	Bank 15	Bank 16	Bank 17	Bank 18	Bank 19	Bank 20
1	626.100	626.200	626.050	626.175	626.300	626.375	626.150	667.850	626.100	628.100
2	626.500	626.600	626.450	626.575	626.700	626.775	626.525	667.475	626.975	628.475
3	627.100	627.200	626.950	627.075	627.200	627.275	626.975	667.025	627.600	628.975
4	627.900	628.000	627.550	627.675	627.800	627.875	627.500	666.500	630.275	629.600
5	629.100	629.200	628.000	628.125	628.250	628.325	628.100	665.900	632.725	630.350
6	630.700	630.800	628.550	628.675	628.800	628.875	628.775	665.225	634.900	631.350
7	632.900	633.000	629.200	629.325	629.450	629.525	629.525	664.475	639.725	632.975
8	636.100	636.200	630.550	630.675	630.800	630.875	630.425	663.575	640.925	634.975
9	638.500	638.600	631.250	631.375	631.500	631.575	631.625	662.375	650.625	637.100
10	643.300	643.400	632.700	632.825	632.950	633.025	633.125	660.875	661.800	640.100
11	647.300	647.400	633.450	633.575	633.700	633.775	634.850	659.150	663.725	641.350
12	651.700	651.800	635.150	635.275	635.400	635.475	637.325	656.675	626.475	644.475
13	659.100	659.200	636.550	636.675	636.800	636.875	640.400	653.600	628.000	647.975
14	662.500	662.600	639.150	639.275	639.400	639.475	642.575	651.425	628.525	652.725
15	667.700	667.800	640.950	641.075	641.200	641.275	645.350	648.650	629.225	658.350
16	628.275	628.375	642.100	642.225	642.350	642.425	649.025	644.975	629.675	663.350
17	629.575	629.675	644.000	644.125	644.250	644.325	652.175	641.825	631.075	666.100
18	631.400	631.500	648.650	648.775	648.900	648.975	656.675	637.325	631.625	631.850
19	633.950	634.050	653.200	653.325	653.450	653.525	658.550	635.450	633.450	632.475
20	637.725	637.825	654.000	654.125	654.250	654.325	661.850	632.150	636.475	633.850
21	640.250	640.350	657.950	658.075	658.200	658.275	665.675	628.325	641.500	634.350
22	641.275	641.375	660.300	660.425	660.550	660.625	666.725	627.275	642.350	637.725
23	650.050	650.150	661.250	661.375	661.500	661.575	629.925	626.100	644.075	638.975
24	655.075	655.175	666.350	666.475	666.600	666.675	635.275	626.725	644.825	639.475
25	657.775	657.875	667.600	667.725	667.850	667.925	639.000	630.700	646.300	642.225
26	661.075	661.175					644.575	631.500	653.975	642.725
27	662.000	662.100					649.725	638.275	655.150	648.475
28	664.725	664.825					655.725	644.275	660.725	649.100
29	665.350	665.450					662.500	649.425	661.375	649.600
30	664.225	664.325					663.300	655.000	667.150	650.975
31	663.475	663.575					667.275	658.725	643.475	652.225
32							667.900	664.075		653.850

Frequency Range G 566–608 MHz

US TV Channel
Ch. 30 (566–572 MHz)
Ch. 31 (572–578 MHz)
Ch. 32 (578–584 MHz)
Ch. 33 (584–590 MHz)
Ch. 34 (590–596 MHz)
Ch. 35 (596–602 MHz)
Ch. 36 (602–608 MHz)

ew100 ew300 ew500

Channel	Bank 1	Bank 2	Bank 3	Bank 4	Bank 5	Bank 6	Bank 7	Bank 8	Bank 9	Bank 10
1	566.450	572.400	578.400	584.400	590.700	596.400	602.250	566.000	566.000	566.100
2	566.950	573.100	579.300	584.900	591.550	596.800	602.800	566.875	566.400	566.500
3	567.900	574.100	579.700	585.550	592.600	597.500	603.200	567.500	567.000	567.100
4	568.350	574.950	580.750	586.000	593.400	598.000	604.300	570.175	567.800	567.900
5	569.500	576.150	581.200	586.850	593.950	599.400	605.100	572.625	569.000	569.100
6	570.050	576.550	582.400	587.400	594.700	600.050	605.550	574.800	570.600	570.700
7	570.850	577.200	583.250	588.600	595.100	601.050	606.550	579.625	572.800	572.900
8	571.250	577.650	583.800	589.500	595.700	601.600	607.700	580.825	576.000	576.100
9	584.300	567.900	568.100	567.250	571.100	570.200	568.250	590.525	578.400	578.500
10	591.550	581.850	568.700	574.450	578.450	575.900	574.850	601.700	583.200	583.300
11	604.250	597.000	592.250	598.000	584.450	581.750	580.700	603.625	587.200	587.300
12	606.450	607.750	603.500	601.150	605.600	585.050	587.900	608.000	591.600	591.700
13	572.800	566.150	573.800	567.850	566.450	566.450	566.300	566.375	599.000	599.100
14	577.900	566.950	575.150	568.900	567.650	567.800	567.350	567.900	602.400	602.500
15	580.150	580.900	587.450	571.600	568.100	568.250	571.700	568.425	607.600	607.700
16	586.550	586.700	597.200	572.200	569.900	569.600	572.450	569.125	568.175	568.275
17	589.750	590.300	597.950	573.850	571.550	571.700	574.100	569.575	569.475	569.575
18	593.550	593.100	600.200	580.750	572.750	573.500	575.900	570.975	571.300	571.400
19	595.050	595.250	600.950	582.100	576.800	577.850	578.900	571.525	573.850	573.950
20	596.700	601.300	602.750	595.750	583.550	578.600	582.800	573.350	577.625	577.725
21	599.550	602.100	604.100	598.600	586.100	589.550	591.350	576.375	580.150	580.250
22	601.050	602.650	605.900	601.750	600.050	594.650	593.450	581.400	581.175	581.275
23	603.250	606.000	606.500	603.550	603.950	605.000	597.500	582.250	589.950	590.050
24	607.750	606.950	607.850	606.100	605.150	606.050	598.550	583.975	594.975	595.075
25	574.900	569.350	569.900	566.500	566.900	572.900	568.850	584.725	597.675	597.775
26	582.650	570.250	571.550	570.400	573.500	574.250	570.500	586.200	600.975	601.075
27	593.150	583.350	572.750	574.900	574.700	576.500	571.250	593.875	601.900	602.000
28	594.200	583.900	575.750	590.800	577.700	580.400	576.800	595.050	604.625	604.725
29	596.200	590.800	584.600	591.850	600.950	580.850	582.200	600.625	605.250	605.350
30	597.550	594.500	594.650	593.200	602.150	590.300	583.850	601.275	604.125	604.225
31	603.850	603.550	598.550	600.100	606.500	602.900	596.300	607.050	603.375	603.475
32	607.200	604.600	607.400	607.900	607.700	607.250	601.100	583.375		

Frequency Range G 566–608 MHz continued

US TV Channel
Ch. 30 (566–572 MHz)
Ch. 31 (572–578 MHz)
Ch. 32 (578–584 MHz)
Ch. 33 (584–590 MHz)
Ch. 34 (590–596 MHz)
Ch. 35 (596–602 MHz)
Ch. 36 (602–608 MHz)

ew100 ew300 ew500

Channel	Bank 11	Bank 12	Bank 13	Bank 14	Bank 15	Bank 16	Bank 17	Bank 18	Bank 19	Bank 20
1	566.200	566.000	566.125	566.275	566.375	566.150	607.850	566.100	568.100	567.500
2	566.600	566.400	566.525	566.675	566.775	566.525	607.475	566.975	568.475	567.875
3	567.200	566.900	567.025	567.175	567.275	566.975	607.025	567.600	568.975	568.375
4	568.000	567.500	567.625	567.775	567.875	567.500	606.500	570.275	569.600	569.000
5	569.200	567.950	568.075	568.225	568.325	568.100	605.900	572.725	570.350	569.750
6	570.800	568.500	568.625	568.775	568.875	568.775	605.225	574.900	571.350	570.750
7	573.000	569.150	569.275	569.425	569.525	569.525	604.475	579.725	572.975	572.375
8	576.200	570.500	570.625	570.775	570.875	570.425	603.575	580.925	574.975	574.375
9	578.600	571.200	571.325	571.475	571.575	571.625	602.375	590.625	577.100	576.500
10	583.400	572.650	572.775	572.925	573.025	573.125	600.875	601.800	580.100	579.500
11	587.400	573.400	573.525	573.675	573.775	574.850	599.150	603.725	581.350	580.750
12	591.800	575.100	575.225	575.375	575.475	577.325	596.675	566.475	584.475	583.875
13	599.200	576.500	576.625	576.775	576.875	580.400	593.600	568.000	587.975	587.375
14	602.600	579.100	579.225	579.375	579.475	582.575	591.425	568.525	592.725	590.125
15	607.800	580.900	581.025	581.175	581.275	585.350	588.650	569.225	598.350	598.125
16	568.375	582.050	582.175	582.325	582.425	589.025	584.975	569.675	603.350	602.000
17	569.675	583.950	584.075	584.225	584.325	592.175	581.825	571.075	606.100	607.000
18	571.500	588.600	588.725	588.875	588.975	596.675	577.325	571.625	571.850	571.250
19	574.050	593.150	593.275	593.425	593.525	598.550	575.450	573.450	572.475	571.875
20	577.825	593.950	594.075	594.225	594.325	601.850	572.150	576.475	573.850	573.750
21	580.350	597.900	598.025	598.175	598.275	605.675	568.325	581.500	574.350	575.500
22	581.375	600.250	600.375	600.525	600.625	606.725	567.275	582.350	577.725	577.000
23	590.150	601.200	601.325	601.475	601.575	607.900	566.100	584.075	578.975	577.375
24	595.175	606.300	606.425	606.575	606.675	607.275	566.725	584.825	579.475	578.375
25	597.875	607.550	607.675	607.825	607.925	603.300	570.700	586.300	582.225	578.750
26	601.175					602.500	571.500	593.975	582.725	581.375
27	602.100					595.725	578.275	595.150	588.475	581.875
28	604.825					589.725	584.275	600.725	589.100	583.375
29	605.450					584.575	589.425	601.375	589.600	588.125
30	604.325					579.000	595.000	607.150	590.975	588.625
31	603.575					575.275	598.725	583.475	592.225	590.500
32						569.925	604.075		593.850	592.625

Multi-channel Wireless Mic System Hookup

1. Rack mount your gear. The GA3 rack adapter can accommodate two half-rack sized units, such as a receiver, a splitter, or an AM2 kit (which includes two front mounts for antennas). Consider how many channels you will need, and select the appropriate number of GA3 units (see the sample drawings on the following pages to get an idea of how this works).

2. Determine whether you will need an antenna splitter(s) based upon the number of channels you require. A rule of thumb is that you will need a splitter for every four channels. If doing more than 8 channels, you will need to group them in groups of 4, or 8 units with another "master" ASA1 which takes the feed from the antennas. Another great advantage which splitters offer is that they will provide DC power to the receivers right through the connection cable. A single splitter will power up to four receivers.

3. Determine where you wish to place your antennas. If you wish to keep them at your rack, you will need an AM2 kit for every splitter you have, unless you optimize the cascading feature of the splitter, which allows the operation of eight receivers of the same frequency range from one pair of antennas. An AM2 it front-mounts two antennas, and takes a total of 1/2 a rack – keep this in mind when configuring your system. If, instead, you wish to remote-mount your antennas to increase the coverage area, you will need to utilize A 1031-U antennas, which are typically mounted to mic stands or WM1 wall mounts. Since the antennas will be used away from the rack, it is not necessary to use AM2 kits.

Antenna Splitter and Mounting Packages

Considering the number of individual items required to rig an evolution wireless G3 receiving antenna splitter system, we have put together seven packages to make ordering these items simpler. These packages address seven common scenarios.

NOTE: The antennas supplied with all ew rack-mountable receivers are to be used only in chassis-mounted (rear jacks), or in conjunction with the AM2 front-mounting kit. These are ground plane devices and are never to be used as a remote antenna solution on the end of a cable.

Due to the variables in one installation to another, the following items are not included with Sennheiser splitter/combiner kits. It is suggested you check and see if you may require any of the following:

- GA3 rack mounts (which are not included with 100 series)
- RG58 cable to run to your antennas
- Mounting brackets for remote antennas
- Rack screws

The following is a list of splitter and antenna kits that Sennheiser currently offers for G3 units:

G3OMNIKIT4
Active splitter kit for four receiver system using omni-directional remote paddle antennas, includes ASA1/NT, two A1031-U, GA3

G3OMNIKIT8
Active splitter kit for eight receiver system using omni-directional remote paddle antennas, includes two ASA1/NT, two A1031-U, GA3, two BB1

G3DIRKIT4
Active splitter kit for four receiver system using directional remote paddle antennas, includes ASA1/NT, two A2003-UHF, GA3

G3DIRKIT8
Active splitter kit for eight receiver system using directional remote paddle antennas, includes two ASA1/NT, two A2003-UHF, GA3, two BB1

G3FRONTKIT4
Active splitter kit for four receiver system using front-mount antennas, includes ASA1/NT, GA3, AM2

G3FRONTKIT8
Active splitter kit for eight receiver system using front-mount antennas, includes two ASA1/NT, two GA3, AM2, two BB1

ASA1/NT
Active antenna splitter with DC power distribution for G3 receivers, includes required NT1-1 US power supply and eight 20" BNC cables

AC3/NT
Active antenna combiner with DC power distribution for IEM transmitters, includes required NT3-1-US power supply and four 20" BNC cables

G3IEMDIRKIT4
Active combiner kit for four IEM transmitters with DC power distribution, includes AC3/NT, GA3, A2003-UHF

Putting Together a System

Following are diagrams of several typical wireless microphone and wireless monitor systems.

NOTE: For systems larger than 8 channels, we recommend using Sennheiser's 2000 Series wireless: http://www.sennheiserusa.com/professional_2000-series-wireless

Four Channel Wireless System

(4 Handheld Systems)

Qty	Model	Description
4	ew335G3	Handheld Systems w/MMD 835-1 capsules
1	G3FrontKit4	Active splitter kit for four receiver system using front-mount antennas, includes ASA1/NT, GA3, AM2

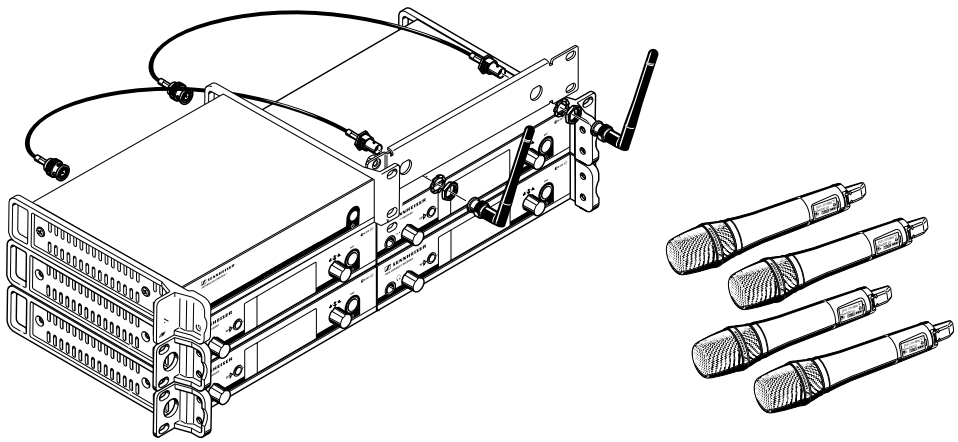

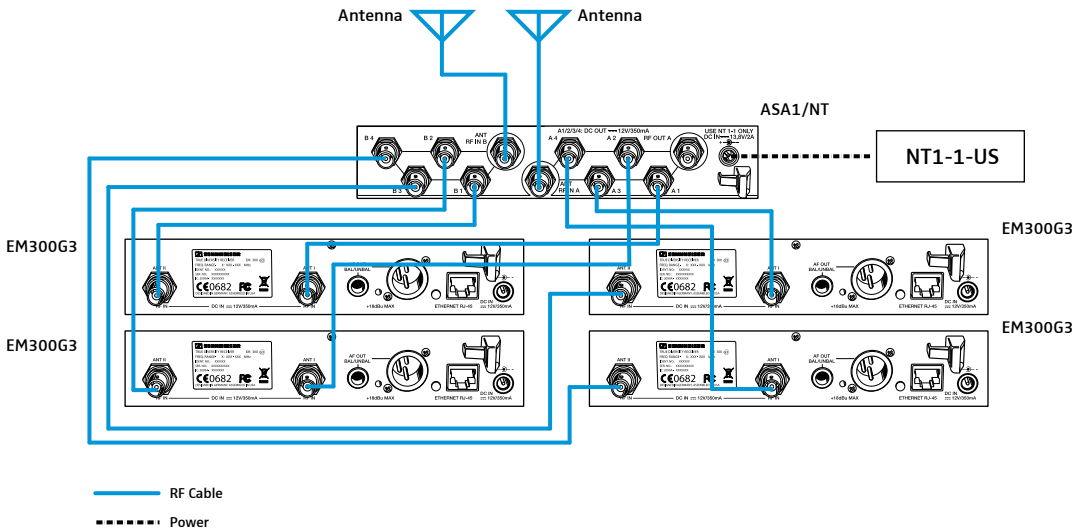

Single Channel Wireless Monitor System

(1 ew300IEMG3 system, for a single stage mix.
NOTE: additional EK300 receivers may be added as needed to monitor the same mix.)

Qty	Model	Description
1	ew300IEMG3	Wireless monitor system with rack mountable transmitter, GA3 rack mount kit, bodypack receiver and IE4 earbuds

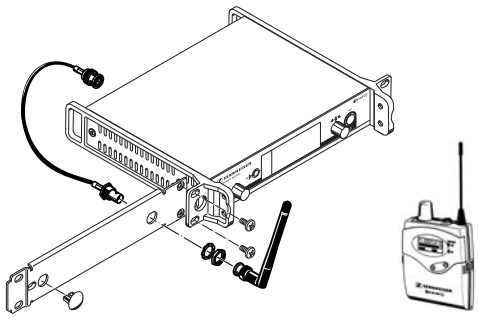

Four Channel Wireless Monitor System

(4 ew300IEMG3 systems)

Qty	Model	Description
4	ew300IEMG3	Wireless monitor system with rack mountable transmitter, GA3 rack mount kit, bodypack receiver and IE4 earbuds
1	G3IEMDirKit4	Active combiner kit for four IEM transmitters with DC power distribution, includes AC3/NT, GA3, A2003-UHF

Note: Various Lengths of RF cable available for antenna run (sold separately)

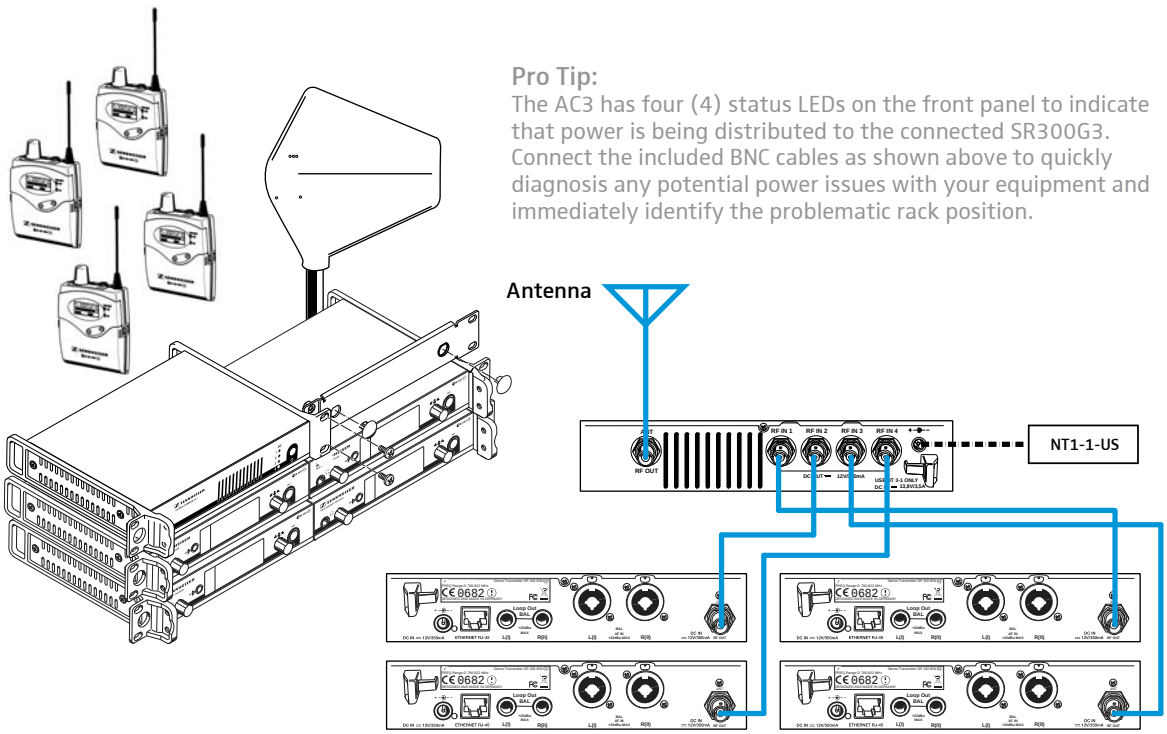

Pro Tip:
The AC3 has four (4) status LEDs on the front panel to indicate that power is being distributed to the connected SR300G3. Connect the included BNC cables as shown above to quickly diagnosis any potential power issues with your equipment and immediately identify the problematic rack position.

Eight Channel Wireless System

(4 Handheld Systems and 4 Lavalier Systems)

Qty	Model	Description
4	ew365 G3	Handheld Systems w/MME865-1 capsules
4	ew312 G3	Lavalier Systems w/ME2 capsules
1	G3OmniKit8	Active splitter kit for eight receiver system using omni-directional remote paddle antennas, includes two (2) ASA1/NT, two (2) A1031-U, GA3, two (2) BB1

Note: Various Lengths of RF cable available for antenna run (sold separately)

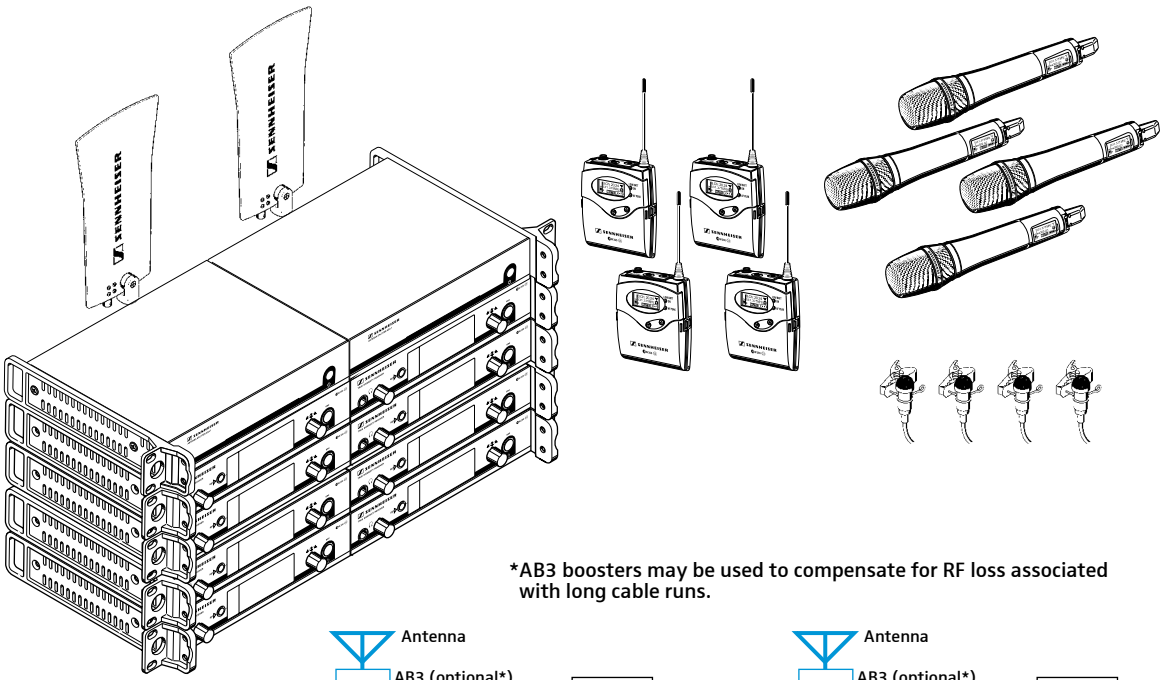

*AB3 boosters may be used to compensate for RF loss associated with long cable runs.

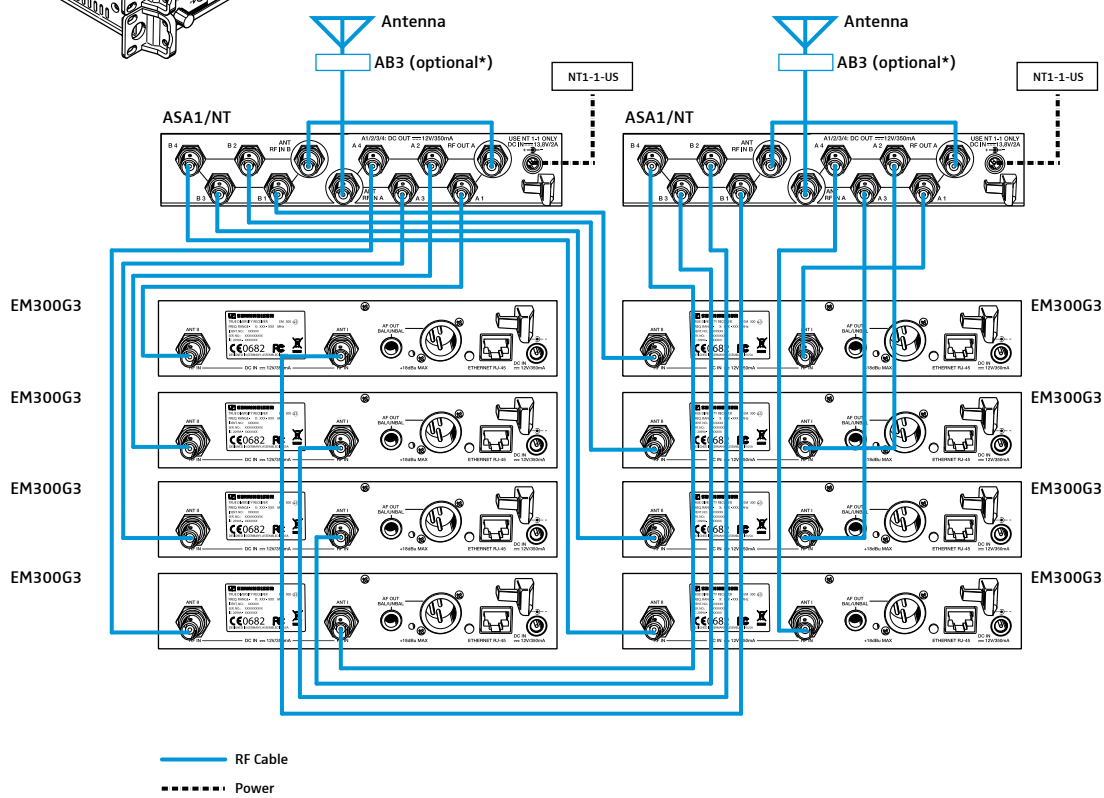

Frequently Asked Questions

Where's the mute switch on the handheld?

100 and 500 Series (as well as 2000 Series) SKM handheld transmitters do not have a "Mute" button due to the fact that true professional microphones (wired and wireless) usually do not have a mute button. Nonetheless, if you press the power button quickly, you will have the option to enable RF Mute on the hand held. This is a two-button operation (press the Power Button momentarily, then use the jog wheel to confirm the RF Mute).

The G3 300 Series SKM Handheld transmitter has a programmable button – this is labeled "Mic" button instead of a "Mute" button because it can serve multiple functions (see below). You can program this model to have the mute latch on/off, or be momentary such as "push to talk" or "push to cough." In addition, you can disable it entirely.

Can I use regular "AA" rechargeable batteries?

Yes. Regular rechargeable batteries (NiMH) will function just fine in your G3 system. The only caveat is that the battery meter may show a low battery status more quickly due to the lower voltage that rechargeable batteries produce. Keep in mind that most G3 portable components have charging contacts for use with the Sennheiser BA2015G2 battery pack and L2015G2/NT charger. It should be known that these contacts will not function with any other battery pack except the BA2015G2.

My wireless system is on and functioning, however I am experiencing feedback and poor sound quality through my PA system. What is the issue?

From the factory, G3 rack mount receivers come with the output level set at +18dB. This is a very strong signal and can result in feedback and poor sound quality with certain mixing consoles and amps. To remedy this, you can adjust the "AF OUT" menu on the receiver to a lower number. It is recommended to start at around "00 dB" and perhaps "+3 dB or +6 dB" depending on your application. These are guidelines, so feel free to experiment to get the best sound possible from your particular system.

Why does my PA system or camera emit a horrible loud static noise when I power off my transmitter?

This simply means you are on a frequency which is already in use, most likely by a television station. When the transmitter is on, everything is working just fine because of the close proximity of the transmitter and receiver. When the transmitter is powered off, the receiver no longer hears the transmitter and tries to latch onto any signal it can find on that same frequency.

If you see RF activity on the display meter with the transmitter powered off, it means that there is another signal on the same frequency interfering with your system (most likely from a TV station). You can use the "Easy Setup" to "Scan New List" and find a new free frequency. Once you select a free frequency, this loud static noise will no longer come through your system when the transmitter is powered off. If you use your system in various locations, it is always a good idea to redo the "Easy Setup" to find a free frequency as the RF environment will change depending on geographical location. Another temporary solution which works sometimes would be to raise the "Squelch" setting from the default "Low" setting to either "Med" or "High." Raising the Squelch level means that the receiver will expect more RF signal before it unmutes. This is a temporary solution, and should only be used as a last resort as raising the squelch also reduces your operating range. It is always better to find a free frequency instead.

Why doesn't my right angle Ci1-R cable work with my new G3 system?

The Ci1-R cable which was sold for G2 was manufactured for Sennheiser by a 3rd party and it was recently discovered that the cable did not meet our exact wiring specification. While this worked fine for G2, it will not work satisfactorily for G3. There is a new model Ci1-R which has the model number "Ci1-R EW." The Ci1-R EW will work on all generations of evolution wireless systems and it can be identified by a gray piece of shrink tubing located at one of the connectors.

AF and RF Mute – what's the difference?

One of the great new features with G3 transmitter body packs is the option for the user to select either an AF Mute (audio frequency) or an RF Mute (radio frequency) option. An AF Mute is the traditional way to mute your audio signal, this is what G2 offered. The RF Mute is different in that it will not only mute the audio to the receiver, but it will take the transmitter carrier off air (remember: you can never have two transmitters on the same carrier frequency at the same time!). This is particularly important for back-up transmitters and guitarists/bassists that have multiple guitars and only one receiver. You can outfit all of your guitars with transmitters on the same frequency and leave them powered on. With RF mute activated, you can simply slide the "Mute" switch on or off and switch guitars quickly. No more powering on or powering off packs.

What are the advantages of Low Power mode on 300/500/2000 Series (& SK 5212)?

In many instances, users think more power is better but, with respect to wireless systems, "just enough" power is best. The stronger your RF output power is, the greater chance your systems may have issues with interfering with other wireless systems. Higher output power also makes it more difficult to deploy large multi-channel systems. It will be possible to achieve higher channel counts in a 42 MHz switching bandwidth by decreasing your RF output power and utilizing properly designed antenna systems.

What is cable emulation?

Cable emulation is a feature which is available on the SK 100 G3, SK 500 G3 and SK 2000 bodypack transmitters– this function allows you to virtually adjust the cable length which the guitar pickups see. It is common knowledge that the longer a corded guitar cable is, the more high frequency loss will occur due to capacitance inherent in the cable. Capacitance can also "load" your pickups and cause them to react differently. When guitarists move from traditional cables to a wireless system, sometimes the wireless system can sound almost "too clean" due to the fact the Sennheiser wireless audio transmission matches or exceeds the Compact Disc quality. Cable emulation allows you to "dial" back in the familiar capacitance and treble roll-off which a performer may consider to be a part of their overall sound.

Why can't I front-mount my antennas on the GA3 rack ears? The rack rails seem to get in the way of the two holes.

To rack-mount the antennas on a full 19" rack unit, you will need the GA3030-AM accessory. This accessory includes two rack handle mounting pieces that will enable you to attach the female BNC bulkhead to the rack, right where there are already drilled and tapped threads. The antenna cable will pass through the rack mount, via the holes, to the back of the receiver where it will connect. More common is the use of the GA3 with the AM2. This allows one to rack mount a single system and place the antennas in the same rack space on the included blank panel.

Frequently Asked Questions (Continued)

How do I use the built-in guitar tuner on my 100 or 500 series G3 receiver?

Simply bring up the menu by pressing the ''SET'' button. Find the ''Advanced'' section and press ''SET'' once more. In this menu you will find the guitar tuner option. Select it by using the ''SET'' button and change it from the ''Inactive'' setting to either ''Active'' or ''Audio Mute.'' Once this is done, you can tap the power button to exit to the main operating screen. By pressing up/down on the arrows (100 series), or by moving the jog wheel (500 series), you can see the tuner on the screen. If you have the tuner setting to ''Active,'' this means the tuner will always pass through the audio. If you set the tuner to ''Audio Mute,'' this means that when you are on the Tuner screen the receiver will mute it's audio output. This is handy if you wish to tune in silence.

Conclusion

As we progress into the 21st century, it is a given; wireless systems are everywhere. Each time we turn on a television, see a performance, watch the news, go to the theatre, or enjoy a concert, we are surrounded by wireless technology. We almost take it for granted. Sennheiser is proud to embrace this movement and place this technology in reach for those who want a high-performance product which is also easy to use. We understand that wireless systems allow you to express yourself to your audience without being constrained by wires.

Sennheiser evolution wireless G3 systems not only showcase breakthrough features, but they are also easily adaptable as your needs change. As long as you can tune each component to the same frequency, you can mix and match previous generations of evolution wireless with current G3 models.

While there will always be certain sophisticated applications which require assistance from the manufacturer, evolution wireless G3 systems are ready to perform right out of the box. With exceptional clarity, extended range, and proven durability, they are truly the best choice for affordable, professional wireless performance.

For additional information about evolution wireless G3 or other Sennheiser products, please contact Sennheiser at 860-434-9190, or log onto our Website at: www.sennheiserusa.com

Notes:

www.sennheiserusa.com

Sennheiser Electronic Corporation
One Enterprise Drive, Old Lyme, CT 06371
Tel: (860) 434-9190 • Fax: (860) 434-1759

Latin America: Tel: 52-55-5639-0956 • Fax: 52-55-5639-9482

Canada: Tel: (514) 426-3013 Fax: (514) 426-3953
www.sennheiser.ca

02/10 Working With Evolution Wireless G3 - Printed in USA - Sennheiser is a registered trademark of Sennheiser electronic GmbH & Co. KG - Subject to alterations and modifications.