ANTHEM™

TRU•MIC TECHNOLOGY

User's Guide

U.S. Patent Pending

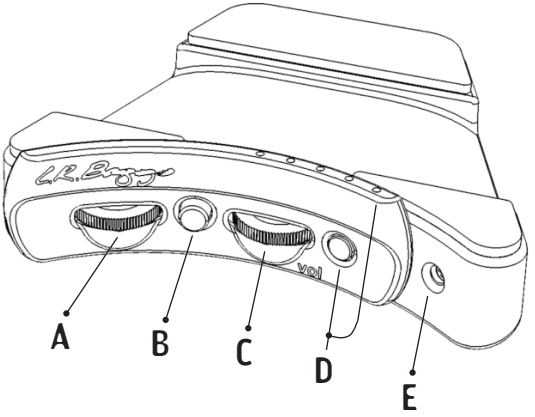

A. MIX CONTROL (Mixes between mic and pickup)

When the mix control is rolled toward the neck, the Tru•Mic is carrying the majority of the guitar's voice with the Element pickup supporting only the lowest frequencies.

When rolled toward the bridge, you will hear the full-range Element pickup only.

Feel free to experiment with different positions as there is a wide range of great sounding and useful settings.

B. PHASE INVERSION

Press this button to invert the phase. Usually one phase will sound best and/or provide the best feedback resistance.

We recommend trying both phases each time you set up.

C. VOLUME CONTROL

Roll this wheel toward the neck to increase the volume or toward the bridge to decrease the volume.

D. BATTERY CHECK

Press this button to check battery life.

A full battery will light up all 5 LED's and should give you approximately 170 hours of playing time. When only two lights are lit, you have about 8 hours of normal playing time left. If only one light is lit, replace the battery.

The battery is typically mounted on the neck block or the upper bout.

To maximize battery life, make sure to unplug your instrument cable when not using the Anthem. The battery check will work even when there is no cable plugged in.

E. MIC LEVEL CONTROL (Adjusts the level of the Tru • Mic relative to the level of the Element)

IMPORTANT: Setting this control correctly is vital to the sound of the Anthem system.

First, you must roll the mix control completely toward the neck. Play through a P.A. or acoustic amplifier while you are making adjustments. A small flat-head jeweler's screwdriver will be needed.

Your amplified tone should be well balanced and true to the acoustic sound and feel of the guitar. If it lacks clarity and top-end, increase the mic's level by turning the control clockwise. Back it off slightly If you experience excessive handling noise and/or brightness.

REGISTER THIS PRODUCT
online at www.lrbaggs.com

L.R. Baggs