Setup Guide

WARNING:
- Drum key can be pinched when adjusting clamps with drum key. Operate carefully.
- Be careful around pipe ends, inside the pipe and screw ends. Metal shavings, etc. May injure your fingers.

1 Check the include items

CYMBAL PADS BOX

Cymbal Pad for Hi-Hat

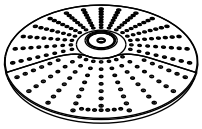

Cymbal Pad for Crash(with choke)

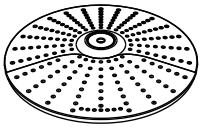

Cymbal Pad for Ride (with choke)

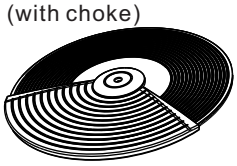

HI-HAT PEDAL BOX

HI-Hat Control Pedal

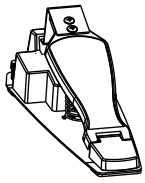

DRUM PADS BOX

Tom Pad x 3

Snare Pad

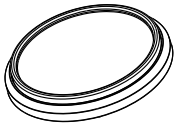

DRUM MODULE BOX

Drum Module

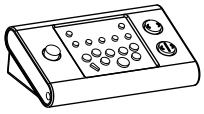

ACCESSORIES BOX

Hi-Hat Holder

Pad Mount X 5

Drumsticks

Drum Key

Hexagon Key

Connection Cable X 9

Owner's Manual

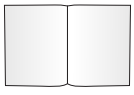

Setup Guide

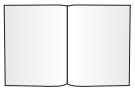

AC Adaptor

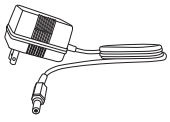

KICK PEDAL BOX

Kick Pad

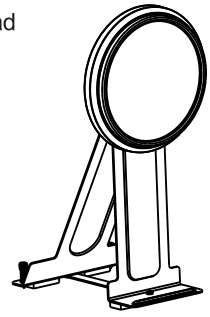

Foot Pedal

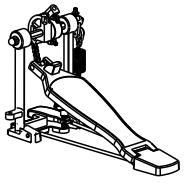

Beater

STAND AND CYMBAL HOLDER BOX

Pillar (L1)

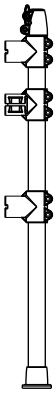

Pillar (R1)

Pillar (L2)

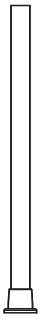

Pillar (R2)

Cymbal Holder(L)

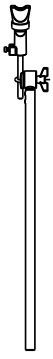

Cymbal Holder (R)

Center Pipe (1)

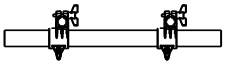

Center Pipe (2)

Side Arm (R)

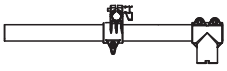

Side Arm (L1)

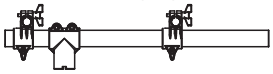

Side Arm (L2)

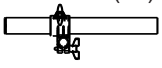

2 Setup the Stand

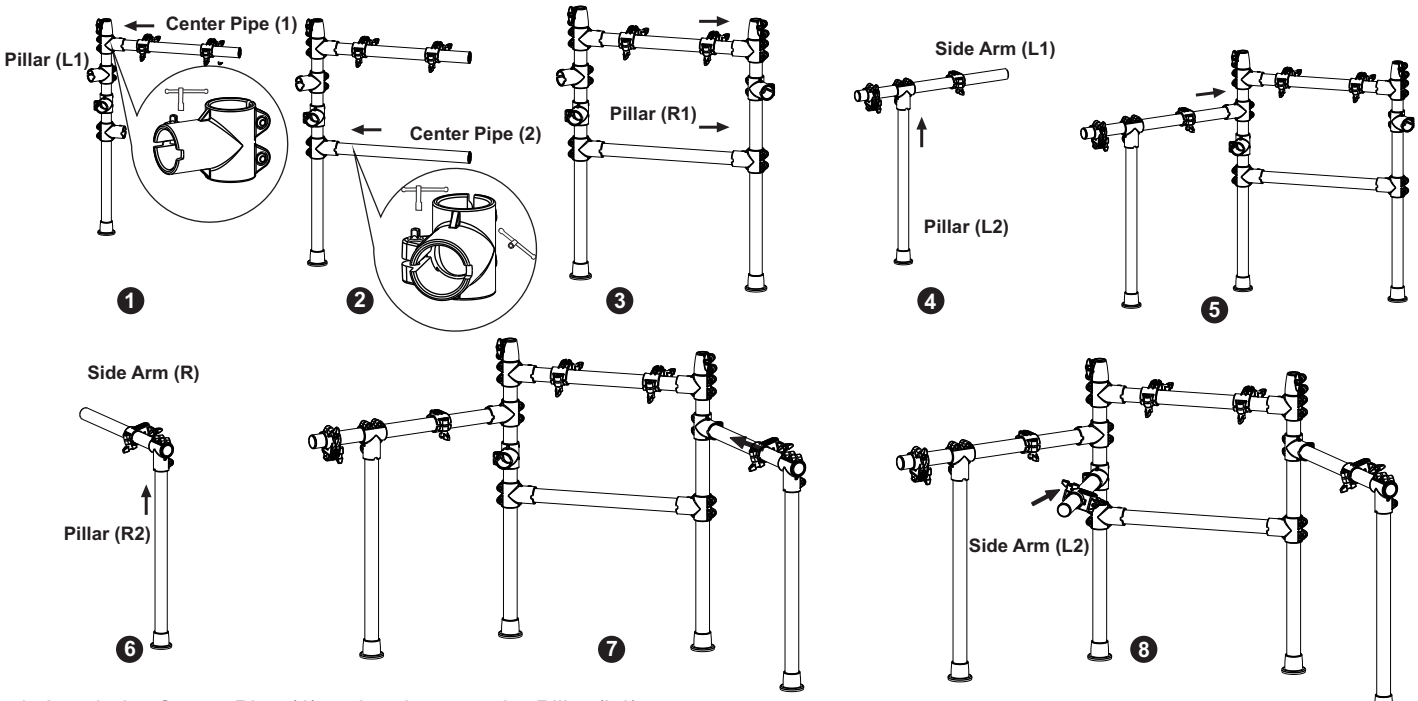

1. Attach the Center Pipe (1) to the clamp on the Pillar (L1).
2. Attach the Center Pipe (2) to the clamp on the Pillar (L1).
3. Attach the Center Pipe (1) & (2) to the clamps on the Pillar (R1).
4. Attach the Side Arm (L1) to the clamp on the Pillar (L2).
5. Attach the Side Arm (L1) to the clamp on the Pillar (L1).
6. Attach the Side Arm (R) to the clamp on the Pillar (R2).
7. Attach the Side Arm (R) to the clamp on the Pillar (R1).
8. Attach the Side Arm (L2) to the clamp on the Pillar (L1).

Note:
- Loosen or tighten the screws on the clamp with drum key as shown partial enlargement.
- Adjust the height of the Side Arms with drum key as needed.

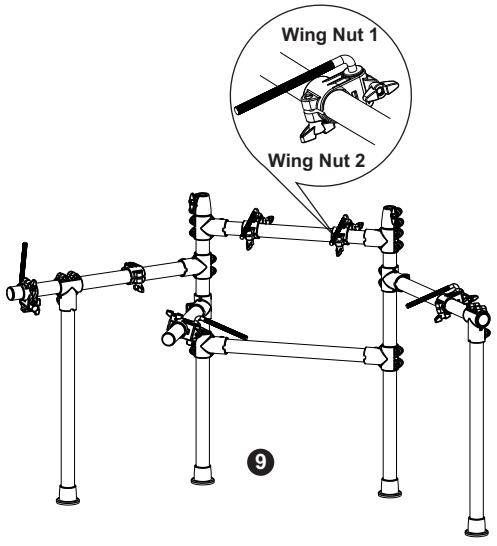

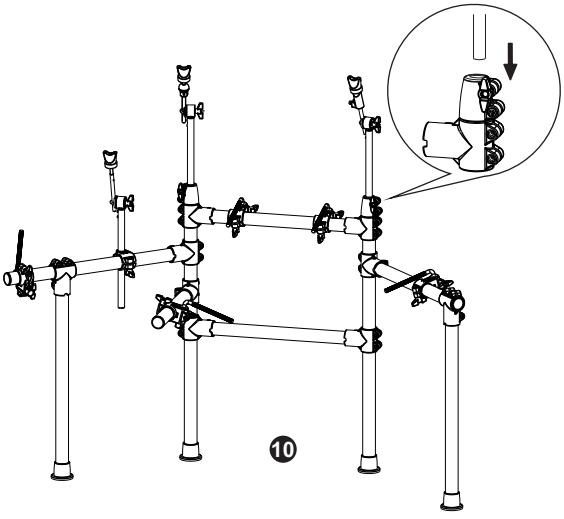

9. Attach the pad mounts to the mount holders on the Center Pipe (1), Side Arm (L2), Side Arm (R), and firmly tighten the respective wing nuts 1.

Note:
- Loosen or tighten the wing nuts on the mount holder as shown partial enlargement.
- Move the mount holders as needed, and firmly tighten the respective wing nuts 2.

10. Insert the two cymbal holders into the holders on the Pillars, attach the hi-hat holder to mount holders on the Side Arm (L1), and firmly tighten the respective wing nuts .

Note:
- Loosen or tighten the wing nuts on the mount holder as shown partial enlargement.

3 Attach the Parts

Attach the Pads

1. Loosen the wing nuts on the drum pads.
2. Attach the drum pads to the pad mounts, and firmly tighten the wing nuts on the drum pads.

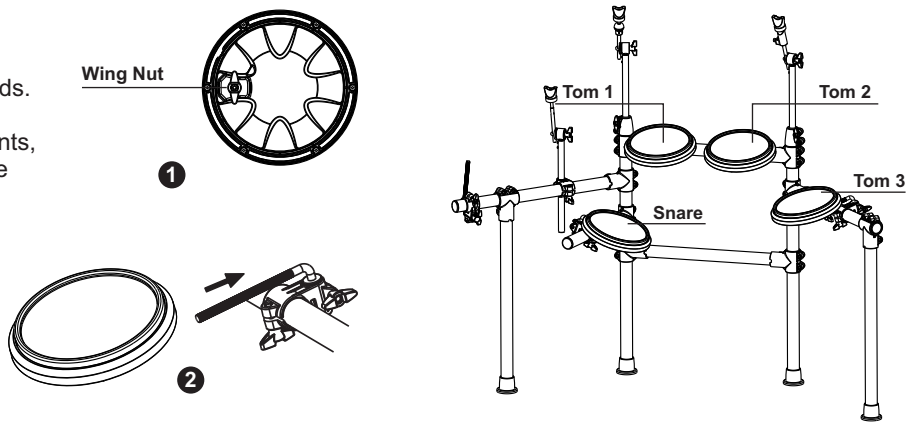

Attach the Cymbal Pads

1. Remove the wing nut and felt washer from the cymbal tilter.
2. Place the cymbal pad, felt washer, wing nut 3 assembly as shown, and tighten the wing nut 3 to obtain an appropriate amount of sway.
3. Adjust the cymbal pad position with the wing nut 4.

Note:

- Put the cymbal on the cymbal adapter and locate the tap of the adapter in the slot of the cymbal bottom.
- Tighten the bolt with the hexagon key as shown partial enlargement

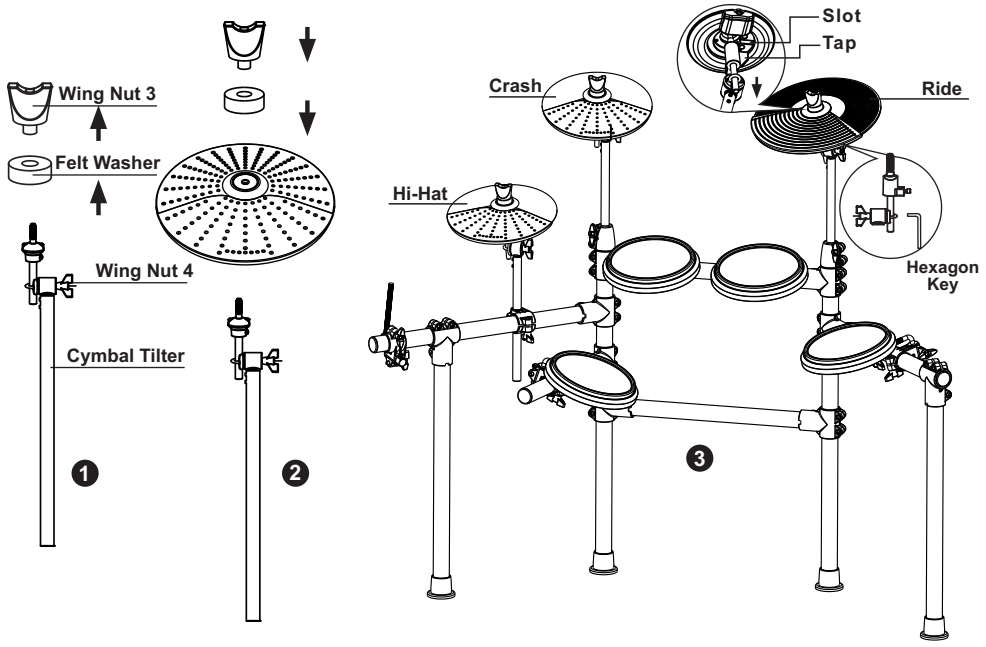

Assemble the Kick

1. Insert the beater to the beater holder on the foot pedal.
2. Adjust the beater position and tighten the beater with the drum key.
3. Attach the foot pedal to the kick pad.
4. Adjust the beat position and tighten the wing nut.

Note:

- Position the one beater in the center of the kick pad or the two beaters equally apart from the center of the kick pad as shown.

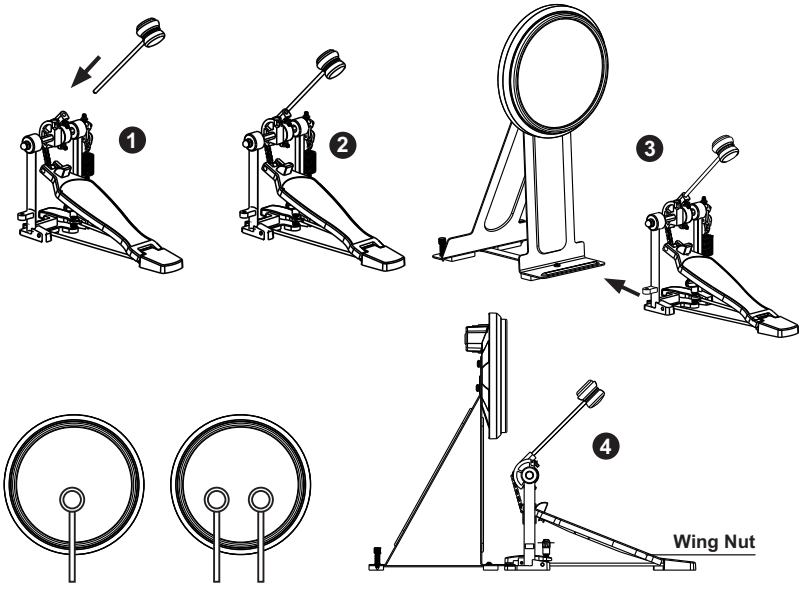

4 Connect the Pads to the Drum Module

Attach the Drum Module

1. Attach the drum module to the mount holders on Side Arm (L1), and firmly tighten the relevant wing nut.

2. Connect the cable to the corresponding Trigger input jack of the drum module.

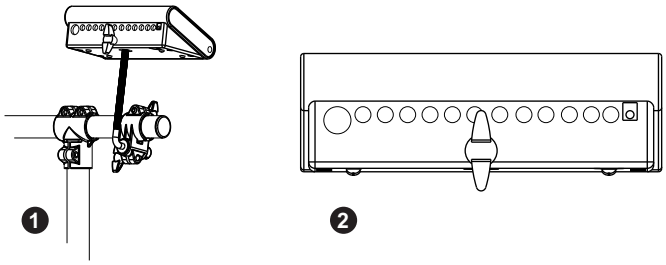

Note:

- Adjust the drum module position by moving the mount holders as needed, and firmly tighten the relevant wing nut.

Connection Procedure

Make connections as shown in the illustration.

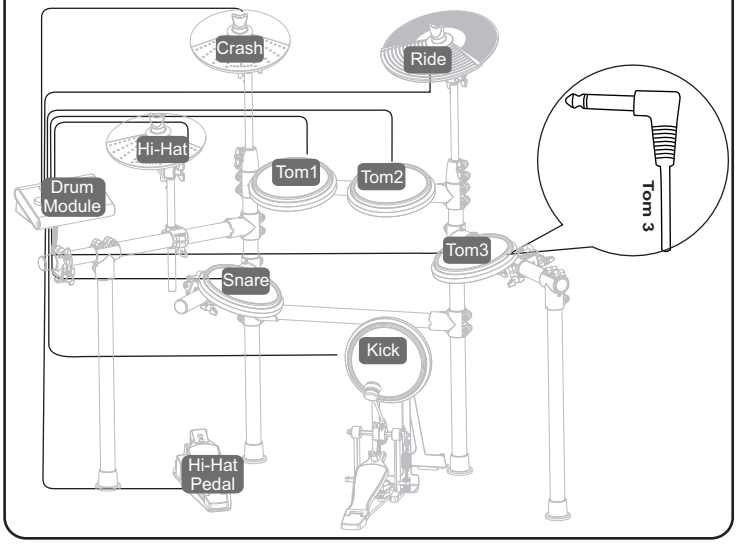

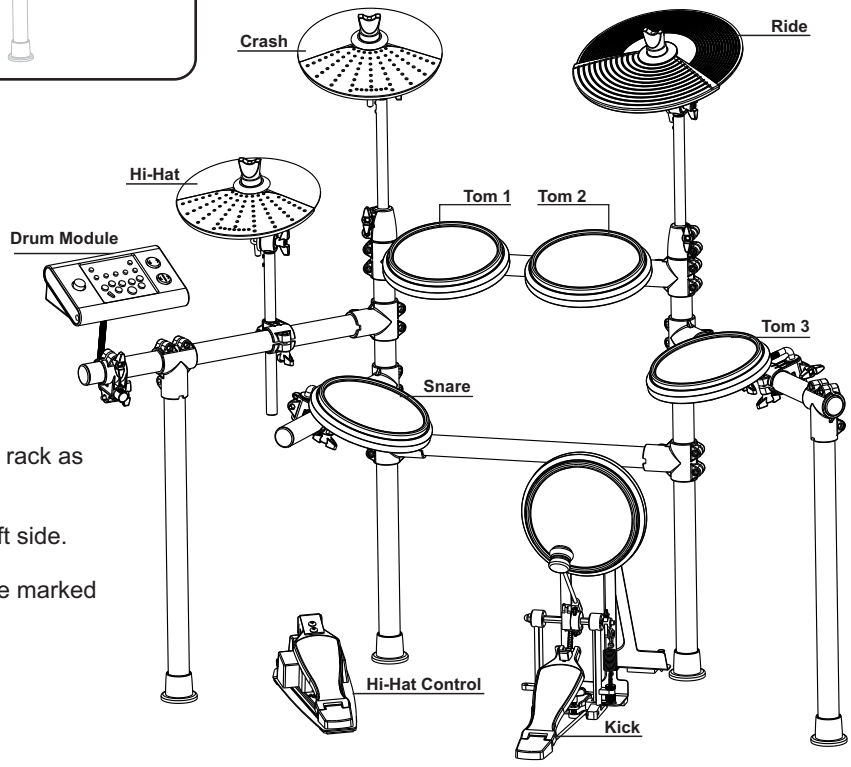

1. Place the kick on the floor in the center of the rack as shown.

2. Place the hi-hat pedal on the floor on your left side.

3. Connect the pads to the drum module with the marked cables.

Are you ready? Let's enjoy playing it.