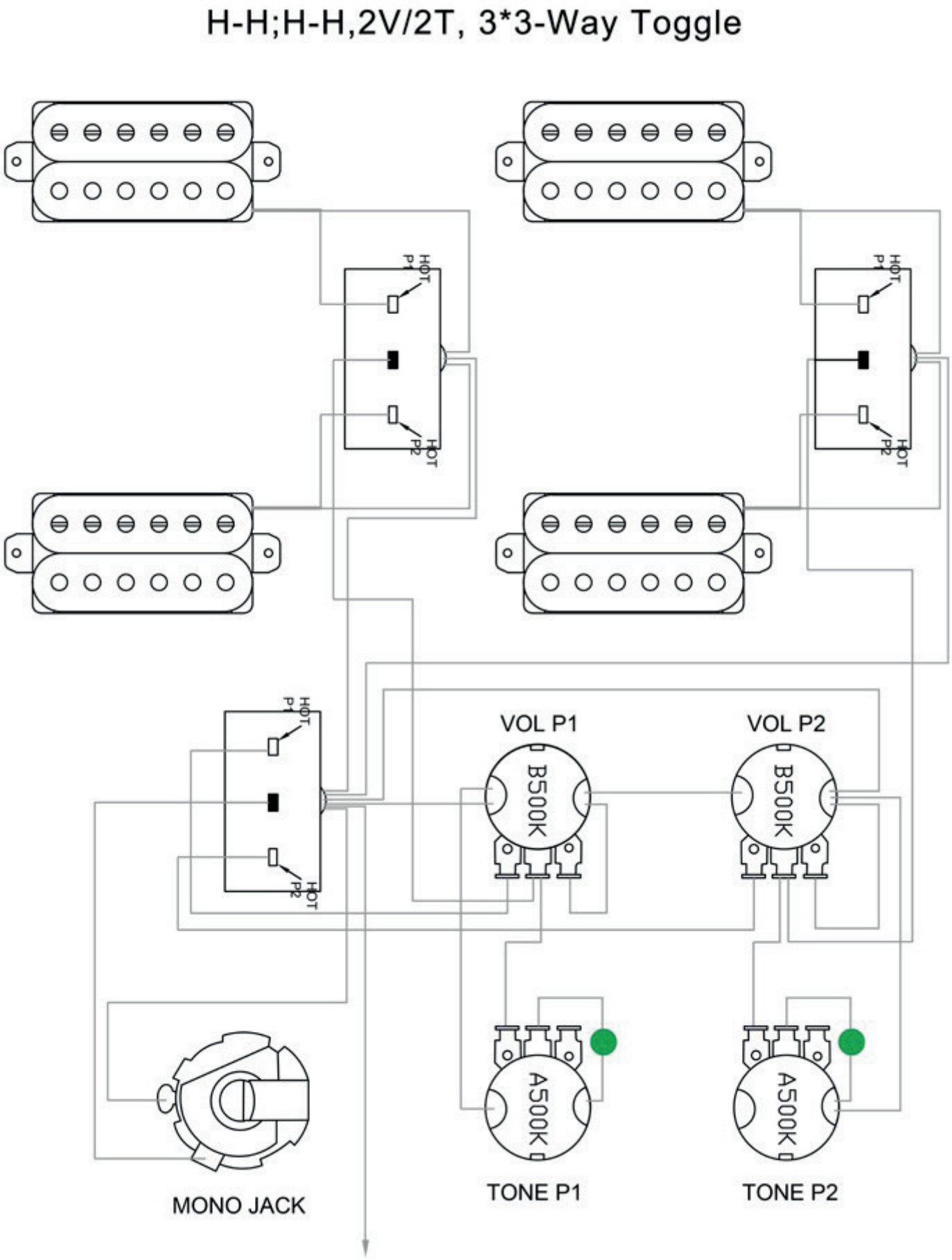KIT-DN-10 wiring diagram